Wheel drive reference design using MOTIX™ IMD701A

About this document

Scope and purpose

This application note describes a turnkey solution for a battery-powered wheel drive application. The motor that drives this wheel is a permanent magnet synchronous motor (PMSM) motor. This solution provides a complete hardware and firmware design for the PMSM motor, utilizing the integrated controller and smart three-phase gate driver MOTIX™ IMD701A, and a sensorless field-oriented control (FOC) methodology.

Intended audience

This document is intended for users who would like to design a wheel drive with sensorless FOC methodology, using the integrated controller and smart three-phase gate driver MOTIX™ IMD701A.

It can be also for the users who would like to design a generic motor drive, because the reference design provides the basic features such as speed control and V_q voltage control for a motor drive.

Infineon components featured

- IMD701A-Q064x128: Integrated XMC1404 MCU and 6EDL7141 smart three-phase gate driver
- BSC155N06ND: 60 V, dual N-channel power MOSFET 15.5 mΩ
- TLE9251VLE: CAN FD 5 Mbps transceiver with STB and VIO

Table of contents

About this document **1**
Table of contents **2**
1 Introduction **3**
2 System overview **4**
2.1 System block diagram 4
2.2 Board overview 4
2.3 Specifications 5
2.4 Key features and benefits 6
3 Features description **7**
3.1 Firmware overview 7
3.1.1 Firmware structure 7
3.1.2 CPU utilization and memory usage 9
3.1.3 Firmware block diagram 9
3.2 Control schemes 10
3.2.1 Open-loop voltage control 10
3.2.2 V_q voltage control 11
3.2.3 Speed control 12
3.2.4 Position control 13
3.3 Protection 13
3.4 Gate driver fault reporting pin 14
3.5 Overvoltage/undervoltage protection 14
3.4 Stall detection 15
4 Schematics and PCB layout **17**
4.1 Schematics 17
4.2 PCB layout 21
4.3 Bill of materials (BOM) 23
5 Firmware configuration **26**
5.1 Motor group 26
5.2 Board group 26
5.3 System group 27
5.4 Protection group 29
5.5 PWM group 29
5.6 Control loop group 30
6 Performance **35**
6.1 Motor parameters 35
6.2 Maximum power 35
6.3 Peak power 37
6.4 MOSFET slew rate configuration 39
6.4.1 MOSFET slew rate relative parameter calculation 40
6.4.2 Operating waveforms 42
References **45**
Revision history **46**
Disclaimer **47**

1 Introduction

This reference design describes a turnkey solution for battery-powered wheel drive application. The wheel drive can be used for robotics applications, such as mowing robot, vacuum robot, cleaning robot, and other service robots.

There can be different types of motors used for wheel drives depending on the requirements of the application, such as ACIM, BDC, and BLDC. Permanent magnet synchronous motor (PMSM) is a type of brushless motor that has significant advantages, including high efficiency, high-power density, low noise level, and low maintenance requirements.

PMSM motors require sophisticated control algorithms to achieve a precise position, speed, and torque control. Field-oriented control (FOC) methodology is commonly used for PMSM motors. A high-performance controller is required to run the control algorithm.

MOTIX™ IMD701A is a motor control IC that integrates a high-performance MCU XMC1404 and a smart three-phase gate driver MOTIX™ 6EDL7141. The high integration level makes it possible to have a compact design that can pack all components onto a circular board with a diameter of 40 mm and an inner hole of 9 mm.

The position control loop enables the robot to walk in a desired way and move to the specific location. Because of the sensorless technique, no rotor position sensor (e.g., Hall or encoder) is required, resulting in reduced system cost and eliminating concerns about sensor wear or failure. Additionally, the use of FOC improves efficiency and reduces noise levels and vibration.

2 System overview

2.1 System block diagram

Figure 1 shows a simplified system block diagram where MOTIX™ IMD701A is used as a sensorless FOC motor controller for a three-phase PMSM motor control system.

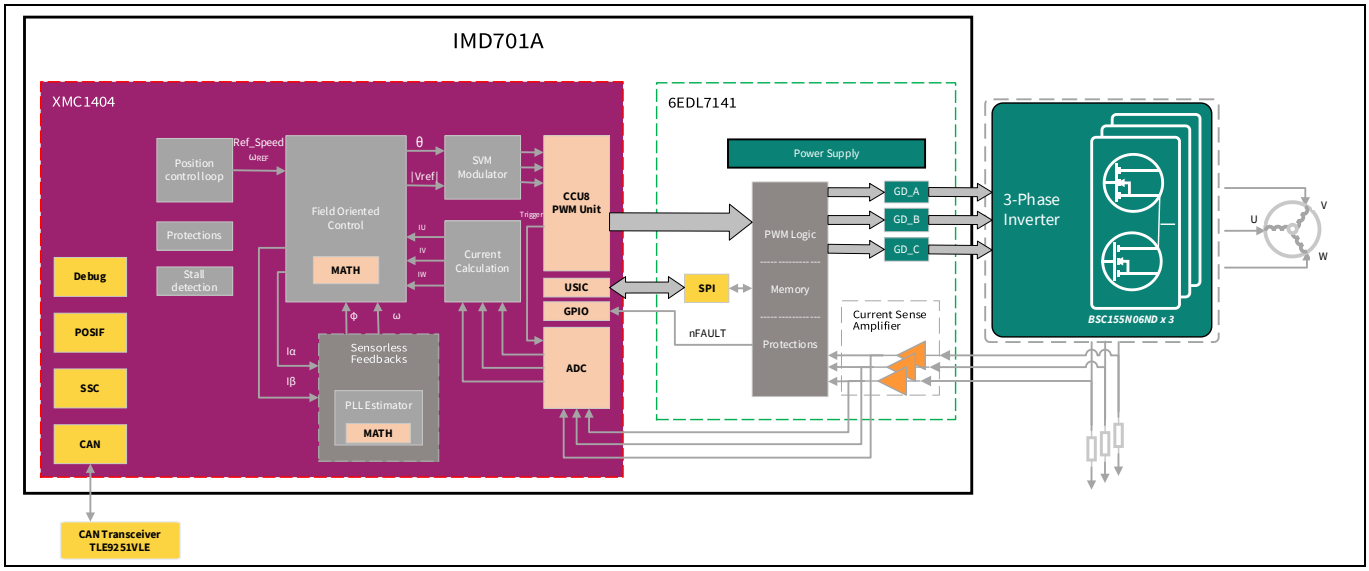

Figure 1 System block diagram

2.2 Board overview

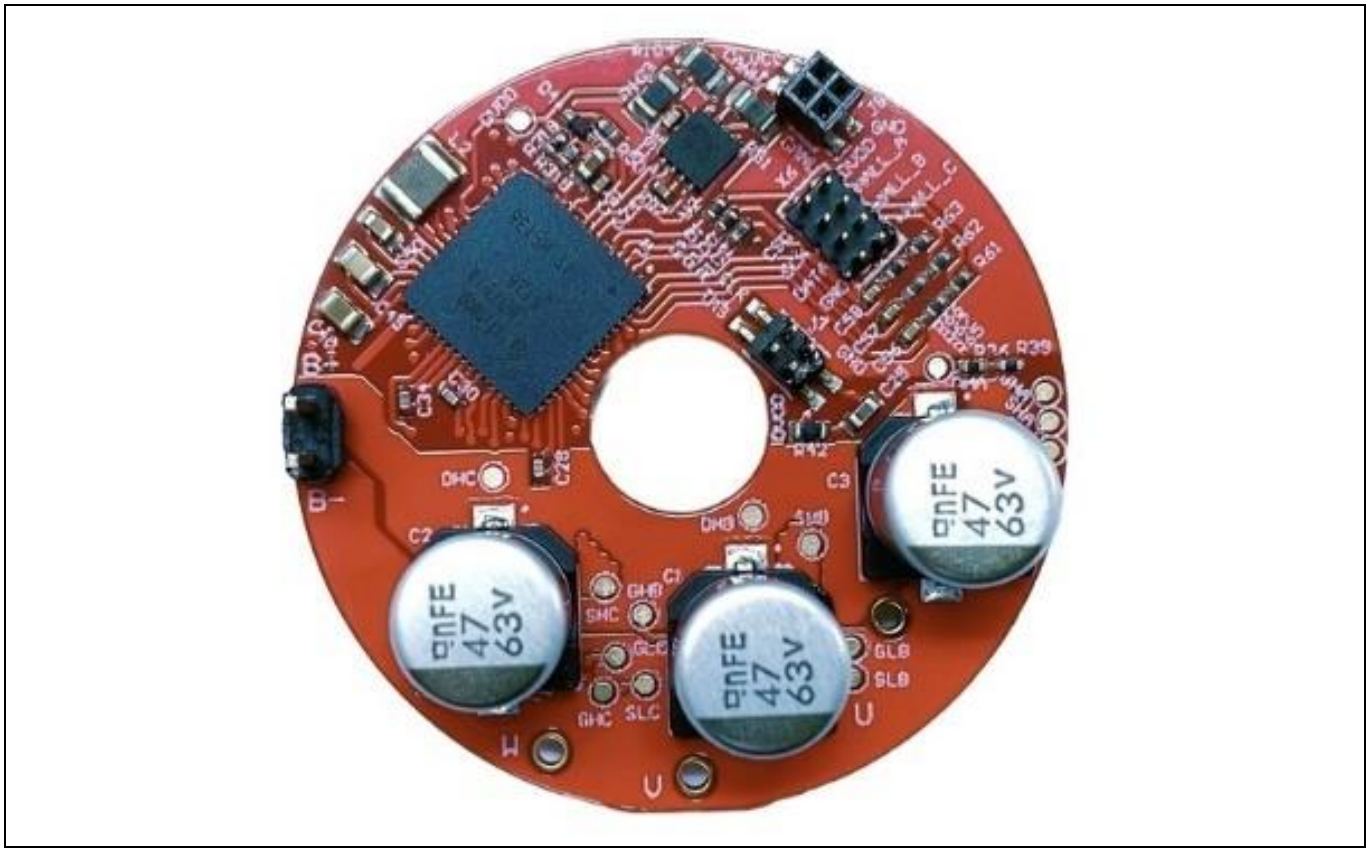

Figure 2 Reference board

MOTIX™ IMD70xA is a motor controller specifically designed for a three-phase BLDC or PMSM drive applications. IMD70xA integrates a fully programmable XMC1404 Arm® Cortex®-M0 microcontroller from the Infineon XMC1400 family with MOTIX™ 6EDL7141, a 60 V three-phase smart gate driver with integrated power supply. Both devices integrated allow an ultra-compact design for driving applications up to 60 V including not only the microcontroller and a flexible three-phase gate driver, but also the complete power supply required in the system (synchronous buck converter and LDO), three current sense amplifiers (CSA), protections and a remarkable set of configurations to adjust to specific needs.

Internally, XMC1404 and 6EDL7141 are connected to ensure proper operation. These interconnects enable SPI communication between both devices for configurability and status reporting of 6EDL7141, six PWM signals for driving a motor, an nFAULT reporting pin to inform the microcontroller of any possible fault on the power side, an enable driver pin, and a brake pin that can be also accessed externally for a double brake path.

BSC155N06ND is an addition to the OptiMOS™ family with dual N-channel power MOSFETs in the SuperSO8 package. By integrating two MOSFETs into a single package, the system power density nearly doubles that of the two single devices, therefore, the board space and cost are minimized. Also, because of integration, the inductance of the phase node is reduced, which improves voltage ringing during switching and helps with the electromagnetic interference (EMI).

2.3 Specifications

Table 1 Board specifications

Parameters	Symbol	Values			Unit	Notes
		Min	Nom	Max		
Supply voltage	V_{in}	12	36	50	V	Disable firmware undervoltage protection (UVP). Because firmware UVP is set at 21.6 V
Max output current	I_{out_max}	–	5	–	A	Ambient temperature: 25°C, 10 minutes, continuous, RMS
Max output power	P_{out_max}	–	220	–	W	Ambient temperature: 25°C, 10 minutes, continuous
Peak output current	I_{out_peak}	–	9	–	A	Ambient temperature: 25°C, 30 seconds, RMS
Peak output power	P_{out_peak}	–	380	–	W	Ambient temperature: 25°C, 30 seconds
Number of shunts	–	–	3	–	–	Current sensing shunt
Board outer diameter	D_{outer}	–	40	–	mm	Circular board outer diameter
Board Inner hold diameter	D_{inner}	–	9	–	mm	Circular board inner hold diameter
Switching frequency	F_{PWM}	–	20	–	kHz	–

2.4 Key features and benefits

- Generic motor control with speed control scheme
- Robotic wheel application with position control scheme
- Equation-based stall detection
- High efficiency
- Compact design
- High-power density

3 Features description

3.1 Firmware overview

3.1.1 Firmware structure

The PMSM FOC motor control firmware is developed based on a well-defined layered approach.

The layered architecture is designed in such a way as to separate the modules into groups. This allows different modules in a given layer to be easily replaced without affecting the performance in other modules and the structure of the complete system.

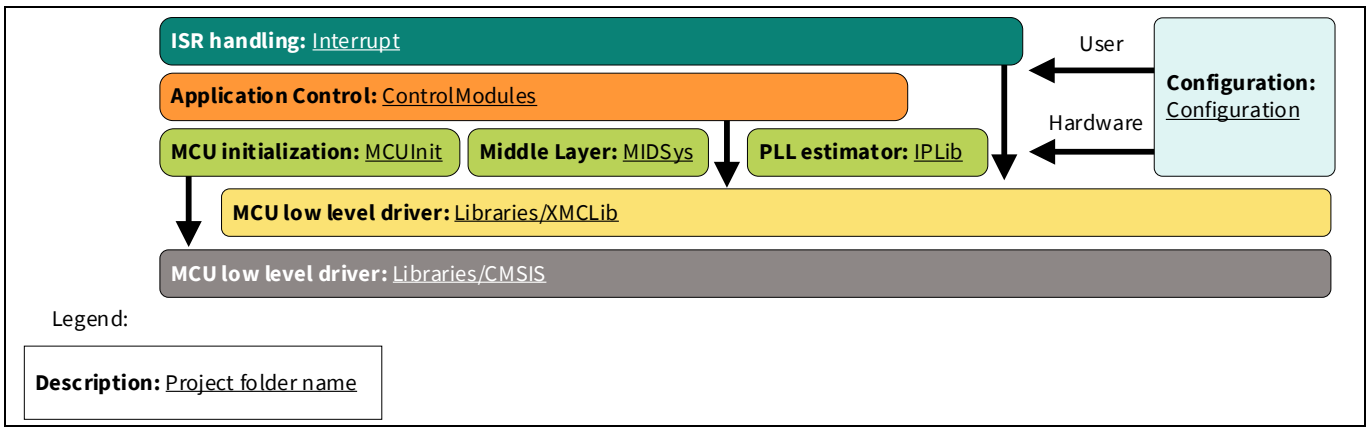

Figure 3 PMSM FOC firmware overview - layered structure

Features description

The project folder structure is well-organized based on the layered approach.

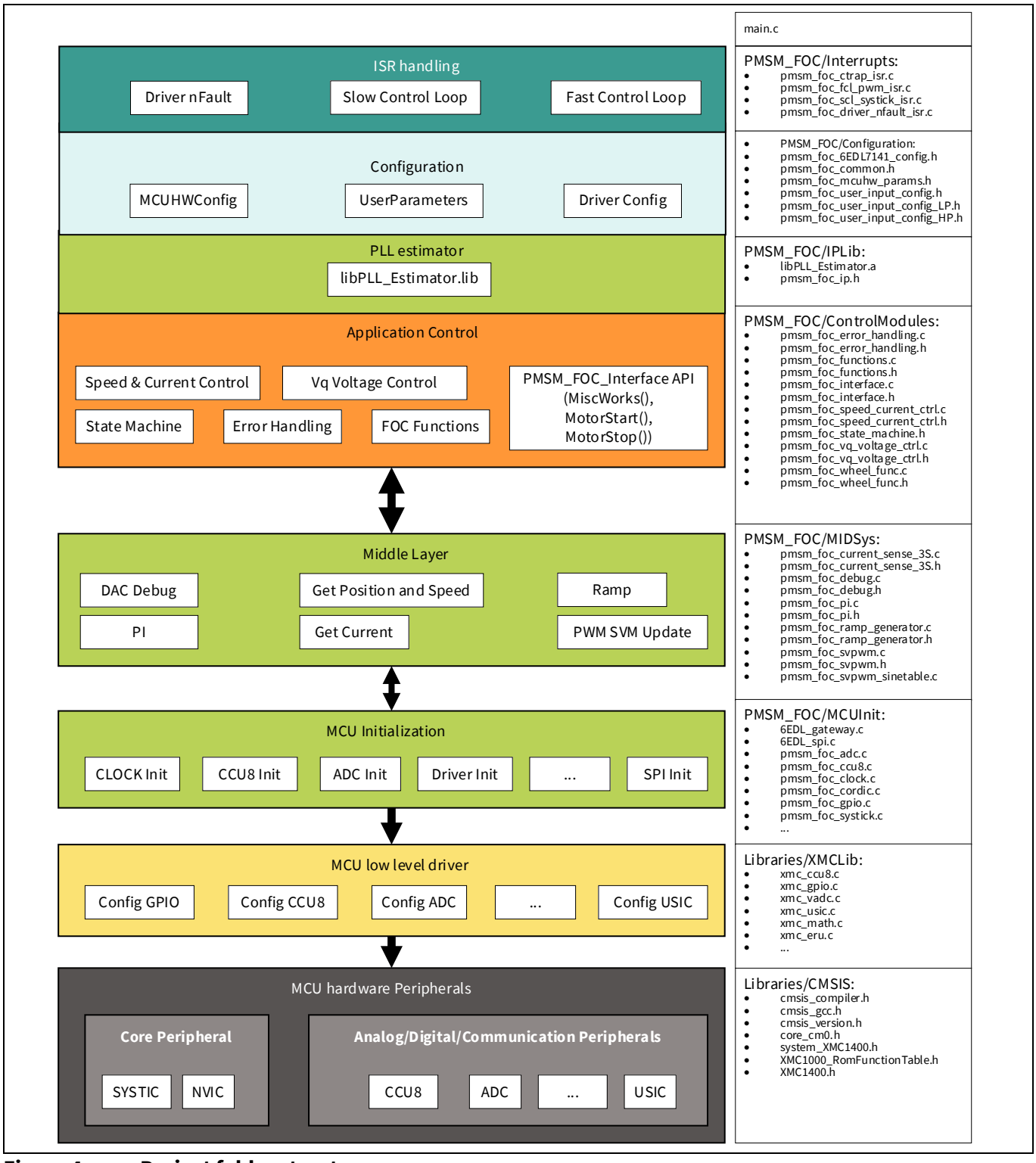

Figure 4 Project folder structure

3.1.2 CPU utilization and memory usage

Breakdown of the memory usage and CPU time-utilization is provided in Table 2 based on the default settings for the Infineon REF_36V_220W_SLFOC reference board.

- Control scheme
  - V_q voltage control
  - Speed control
  - Position control
- Current sensing technique
  - Three-shunt synchronous ADC conversion
- GUI feature
  - USER_UCPROBE_GUI enabled
  - USER_UCPROBE_OSCILLOSCOPE disabled

Table 2 CPU utilization and memory usage for three-shunt current sensing with XMC1404

	V_q voltage control	Speed control	Position control
PWM frequency	20 kHz – interrupt service routine (ISR) runs every 50 µs		
ModusToolbox™ GCC Compiler optimization level	Release		
CPU utilization	73.6%	79.5%	84.4%
Flash code size (bytes)	29932	29928	29928
SRAM code size (bytes)	4096	4096	4096
Total utilized SRAM size (bytes)	5676	5676	5676

3.1.3 Firmware block diagram

Figure 5 shows the firmware block diagram of this reference design. In addition to the traditional Infineon's sensorless FOC firmware block diagram, the position control loop is developed to achieve the position control feature.

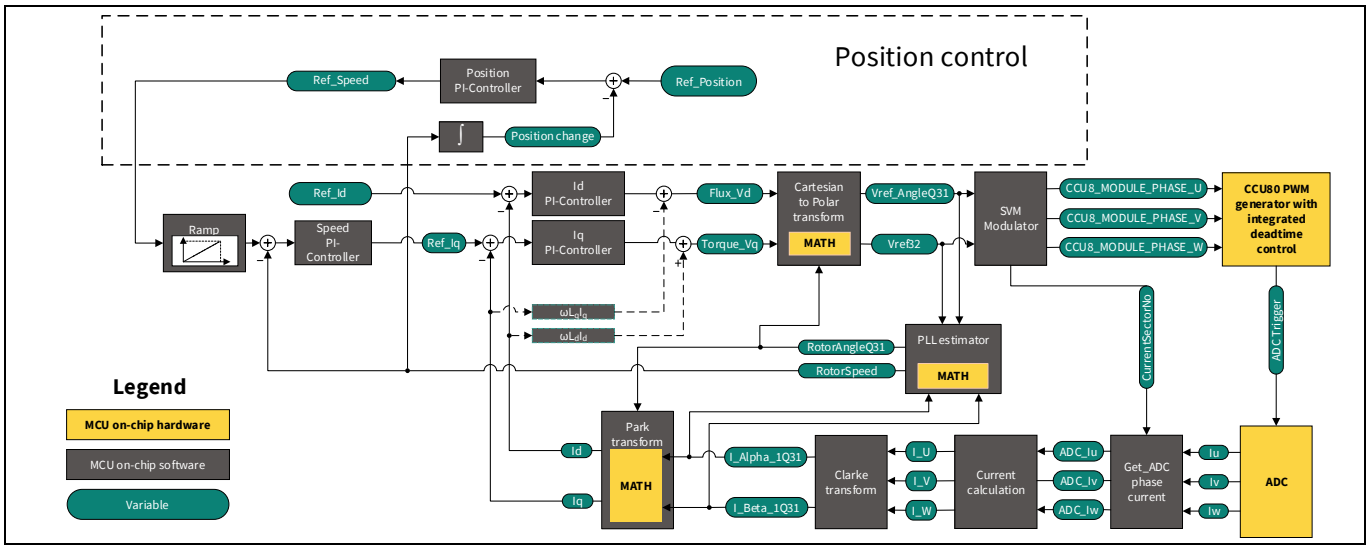

Figure 5 Firmware block diagram

3.2 Control schemes

In this software block, the control scheme for the three-phase PMSM FOC motor can be:

- Open-loop voltage control
- V_q voltage control
- Speed control
- Position control

3.2.1 Open-loop voltage control

In an open-loop voltage control, a reference voltage (V_{ref}) is used to cause the power inverter to generate a given voltage at the motor. The mechanical load influences the speed and the current of the PMSM motor.

This control scheme is usually used at the development stage. It provides less accurate control over the output voltage than a closed-loop system. But it is an easy way to generate waveforms when the user wants to validate specific features of the board. For example, it can be used to validate the switching performance of the MOSFETs before the closed-loop control scheme is fine-tuned.

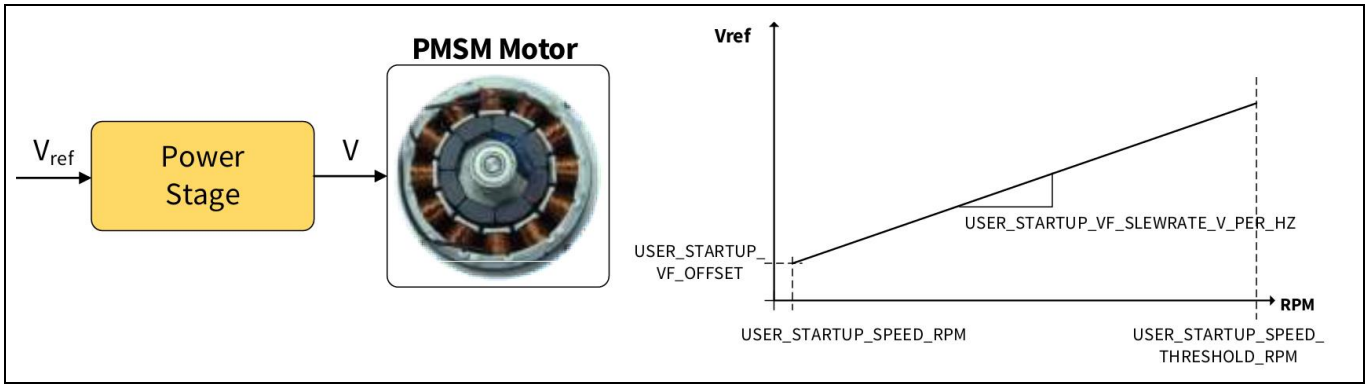

Figure 6 Open-loop voltage control

3.2.2 V_q voltage control

The V_q voltage control is used when a fast response is required and varying speed is not a concern. This control scheme can be used for power drill application.

The speed PI control loop and torque PI control loop are disabled.

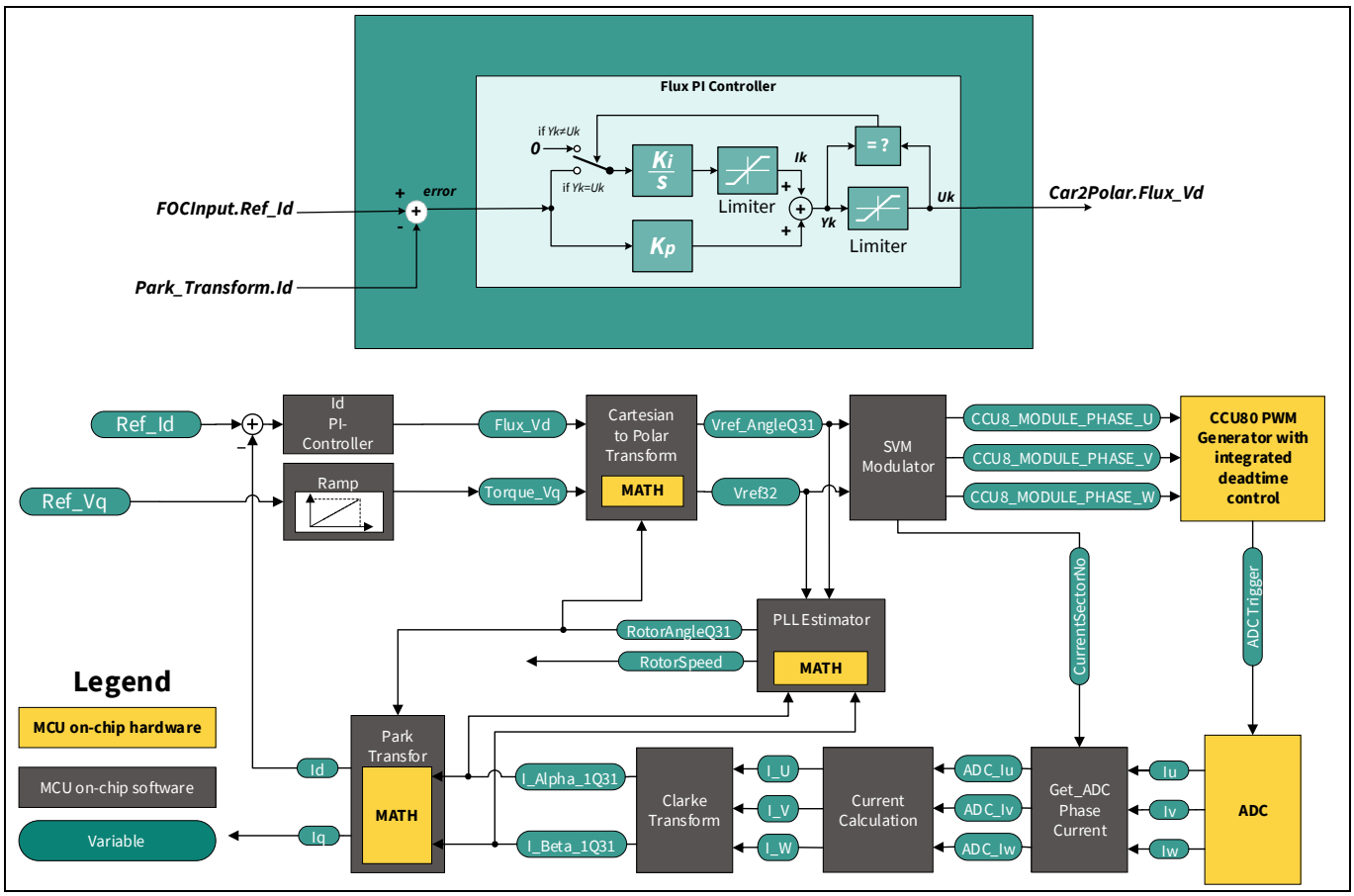

Figure 7 V_q voltage control scheme

3.2.3 Speed control

A speed control scheme is a closed-loop control. This scheme uses a cascaded speed and current control structure. This is because of the change response requirement for a speed control loop, which is much slower than the one for the current loop.

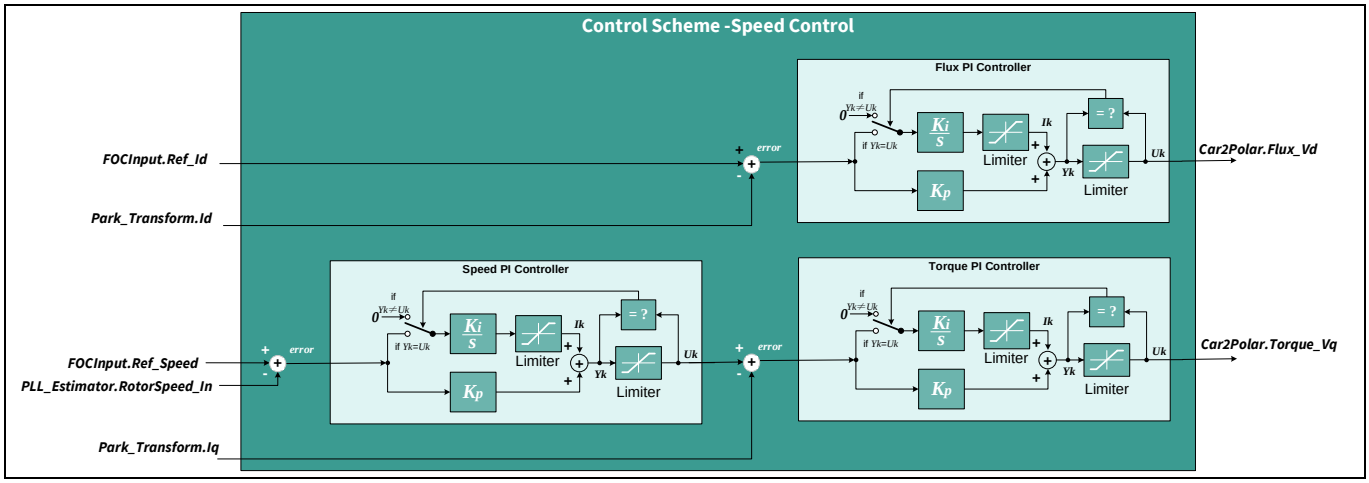

Figure 8 Speed control scheme

The speed PI controller supports integral anti-windup. The integral output is held stable when either PI output or integral output reaches its limit.

The output of the speed PI is used as the reference for the torque PI controller.

Direct FOC start-up and transition start-up (open-loop to closed-loop) modes are supported in the speed control scheme.

Transition start-up mode: three-step start-up

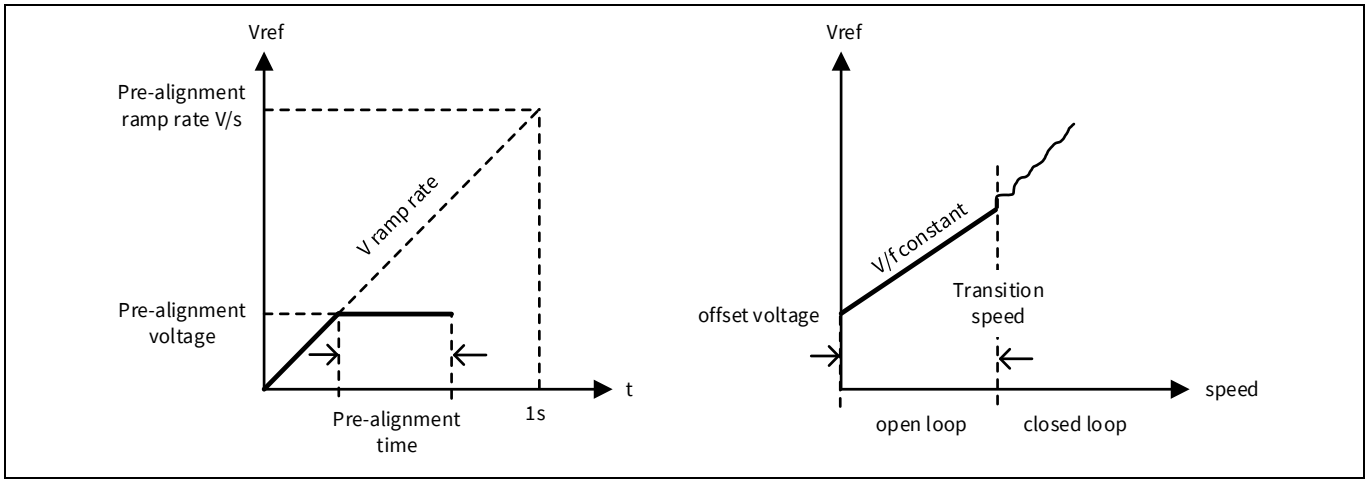

Figure 9 Three-step motor start-up mechanism

The three steps are:

1. After the pre-alignment implementation (optional), the motor starts in the V/f open-loop control state and ramps up to a user-defined start-up speed.
2. The PI controllers' integral terms are initialized at the end of an open-loop for a smooth transition to a closed-loop.

3. The state machine switches to FOC_CLOSED_LOOP state and ramps up the motor speed to the user-defined target speed.

3.2.4 Position control

A position control scheme is a closed-loop control. This scheme uses a cascaded position, speed, and current control structure. The output of the position PI is used as the reference for the speed PI controller.

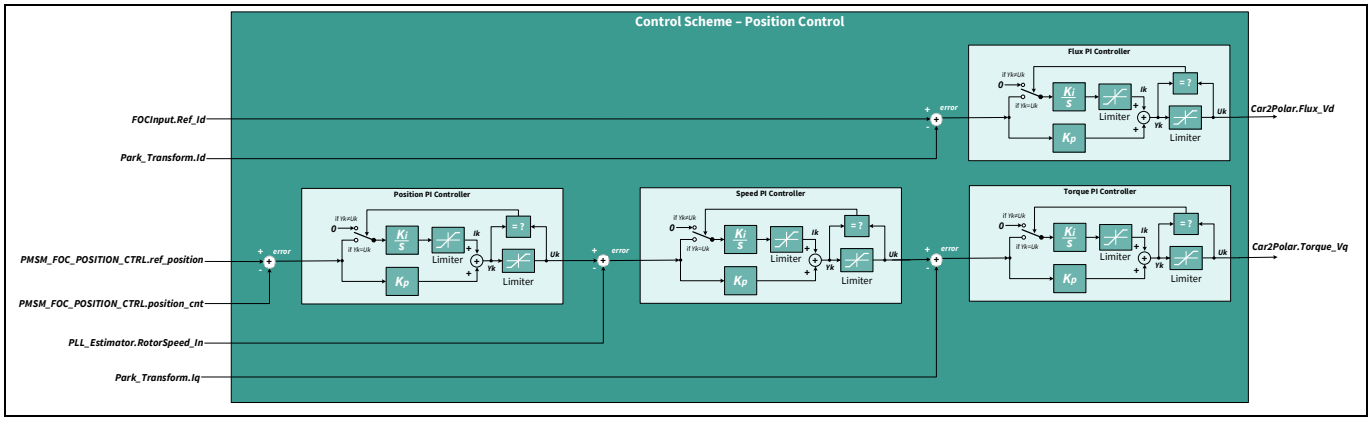

Figure 10 Position control scheme

Similar with the speed PI controller, the position PI controller supports an integral anti-windup. The integral output is held stable when either PI output or integral output reaches its limit.

Direct FOC start-up is suggested for the position control. Because of the fast convergence of the algorithm, the position error is minimized with the direct FOC start-up.

This control scheme is especially useful for mobile robot wheel applications when the position of the robot is the control target.

3.3 Protection

This firmware supports the following protection schemes:

- Gate driver fault reporting pin
- Overvoltage protection (OVP)/undervoltage protection (UVP)

The corresponding error status is set when either of the faults occurs; it changes the motor state machine to PMSM_FOC_MSM_ERROR state.

3.4 Gate driver fault reporting pin

The smart gate driver MOTIX™ 6EDL7141 contains many protection features such as:

- Overcurrent protection (OCP) for:
  - DVDD linear regulator
  - Buck converter
  - Motor leg shunt OCP
- Undervoltage lockout (UVLO) protection for:
  - Gate driver supply voltage, both high-side and low-side drivers
  - Supply voltage PVDD
  - DVDD linear regulator output voltage
  - Buck converter output voltage
- DVDD linear regulator overvoltage lockout (OVLO) protections
- Rotor locked detection based on Hall sensor inputs
- Configurable watchdog
- Overtemperature shutdown (OTS) and warning (OTW)
- OTP memory fault

When any of the events occur, the fault is asserted and the nFAULT pin is pulled low, reporting the fault to XMC1404 via a GPIO interrupt. In the ISR, the error status is set to PMSM_FOC_EID_NFAULT_FAULT and the nBRAKE pin of the gate driver is activated.

Following registers of 6EDL7141 provide information on the status of the device faults:

- **FAULT_ST**: Holds most of the functional related faults. A fault can be triggered only after a number of events of a malfunction. Status will immediately record the event information.
- **TEMP_ST**: Provides status on temperature warning and the temperature reading itself
- **SUPPLY_ST**: Reports on status of all supplies UVLO/OVLO and OCPs
- **FUNC_ST**: Status of OCP faults for each of current sense amplifiers, Hall sensors, and wrong hall pattern.
- **OTP_ST**: Programming and reading of overtemperature protection (OTP) related faults

See the MOTIX™ IMD701A datasheet for more details on MOTIX™ 6EDL7141 protections and fault handling.

3.5 Overvoltage/undervoltage protection

The DC-link voltage is read in the function PMSM_FOC_SysMonitoring() every PWM period match interrupt. An error is generated if the DC-link voltage is higher than the overvoltage threshold or lower than the undervoltage threshold. The error status is set as PMSM_FOC_EID_OVER_VOLT or PMSM_FOC_EID_UNDER_VOLT accordingly.

3.4 Stall detection

When the motor is overloaded, it cannot have enough torque to keep the rotation going, eventually causing it to stall. Because the system is closed-loop, monitoring the torque gives an idea how close the motor is getting to overload.

This method detects the stall event with the equation-based torque calculation. The estimator and the control loops are assumed to work fine when the stall event happens.

- Following equations approximately calculate the torque constant K_T with the maximum speed ω_{max} of the motor, when the BEMF constant K_e is unknown to the user.
- If the user has the BEMF constant K_e, then the BEMF constant K_e should be used in the equation.
- If the user has the torque constant K_T, then the actual torque constant K_T should be used directly.

$$K_e = \frac{V_{DC}}{\sqrt{2} \times \omega_{max}} \times \frac{60}{2 \times \pi}$$

Equation 1

$$K_T = \sqrt{3} \times K_e$$

Equation 2

$$K_T_INV = \frac{1}{K_T}$$

Equation 3

Where,

V_{DC} = DC-link voltage in engineering unit (V)

ω_{max} = Maximum speed of the motor in engineering unit (RPM) (voltage control scheme can be used to get the maximum speed).

K_T_INV = Reciprocal of K_T. This will avoid division calculation for the MCU.

In this example, use a GUI to set the stall torque T_m in engineering unit $[N \cdot m]$.

When the torque is set in the GUI before the motor startup, the torque current I_q can be calculated from the stall torque T_m and the torque constant K_T, assuming the motor is a non-salient motor.

$$I_q = \frac{T_m}{K_T} = T_m \times K_T_INV$$

Equation 4

Where,

I_{NORM_Q15} = Normalizing the current in engineering unit to the normalized value and do the conversion from RMS value to amplitude value.

The torque current threshold is obtained from the calculation based on the stall torque that is set via the GUI.

Features description

$$I_{NORM_Q15} = \sqrt{2} \times \frac{R_{shunt} \times A}{\frac{AVDD}{2}} \times 2^{15}$$

Equation 5

$$N_I_q = I_{q_eng_unit} \times I_{NORM_Q15}$$

Equation 6

After the torque current exceeds the threshold, it is believed that the stall event is triggered.

4 Schematics and PCB layout

4.1 Schematics

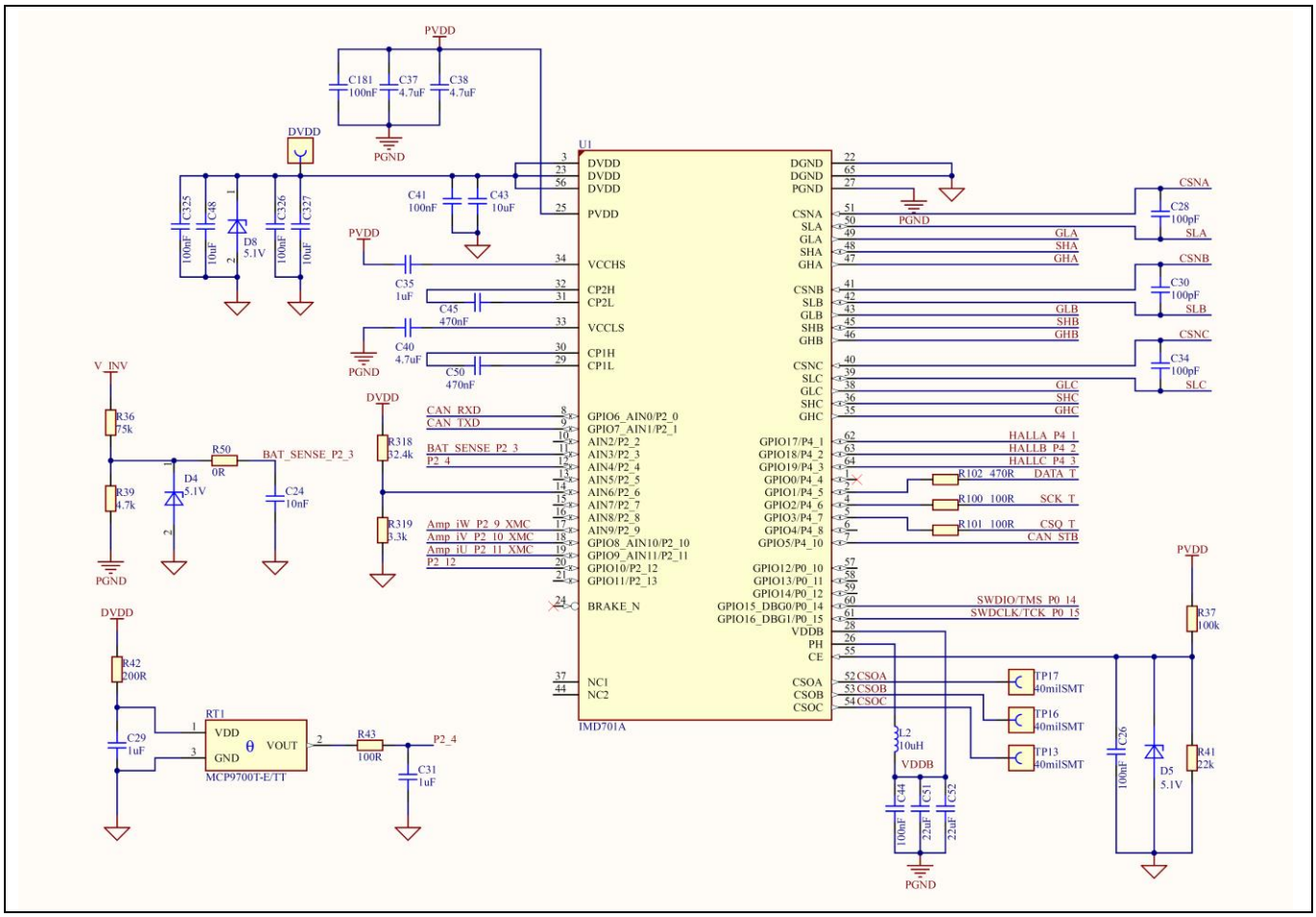

Figure 11 REF_36V_220W_SLFOC - MOTIX™ IMD701A control and gate driver

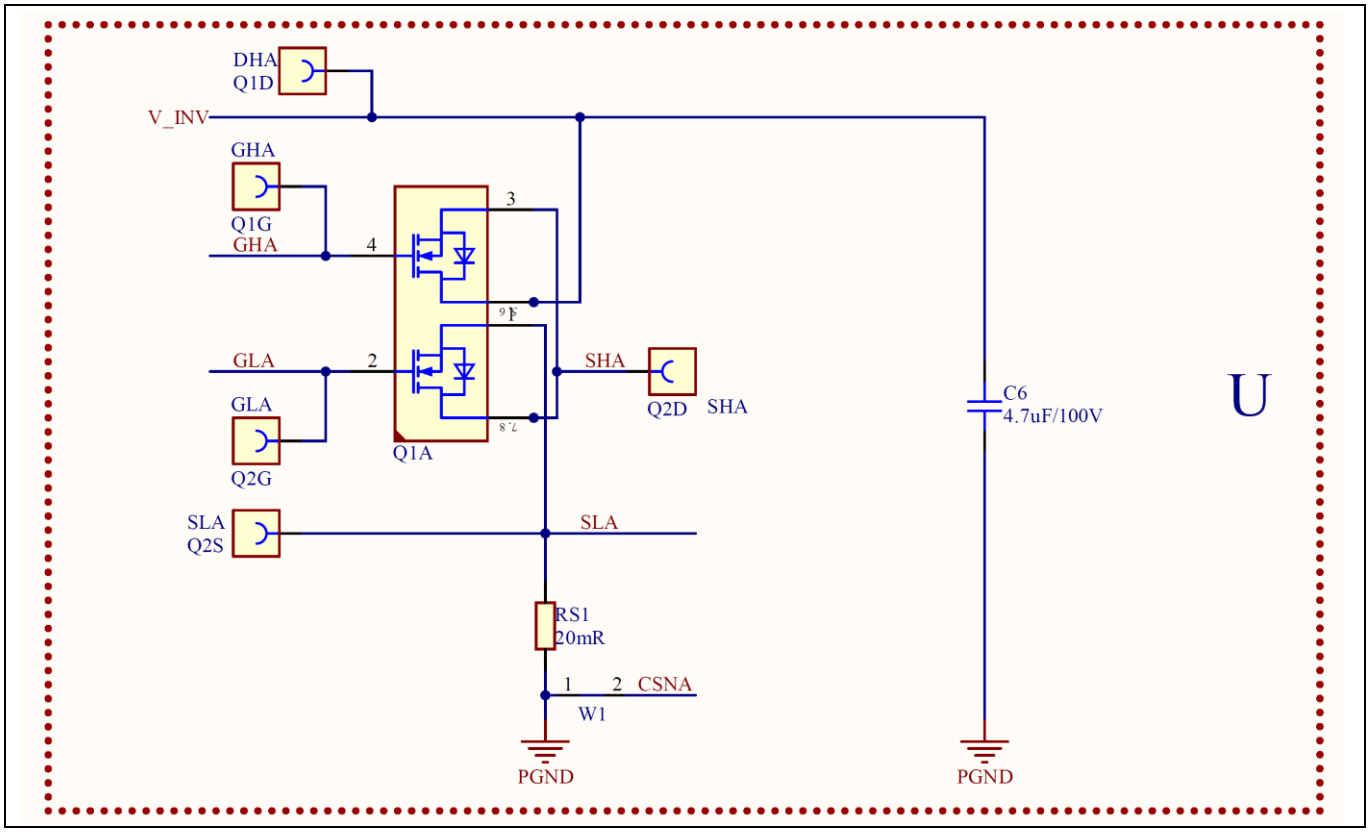

Figure 12 REF_36V_220W_SLFOC – MOTIX™ - power stage, phase “U”

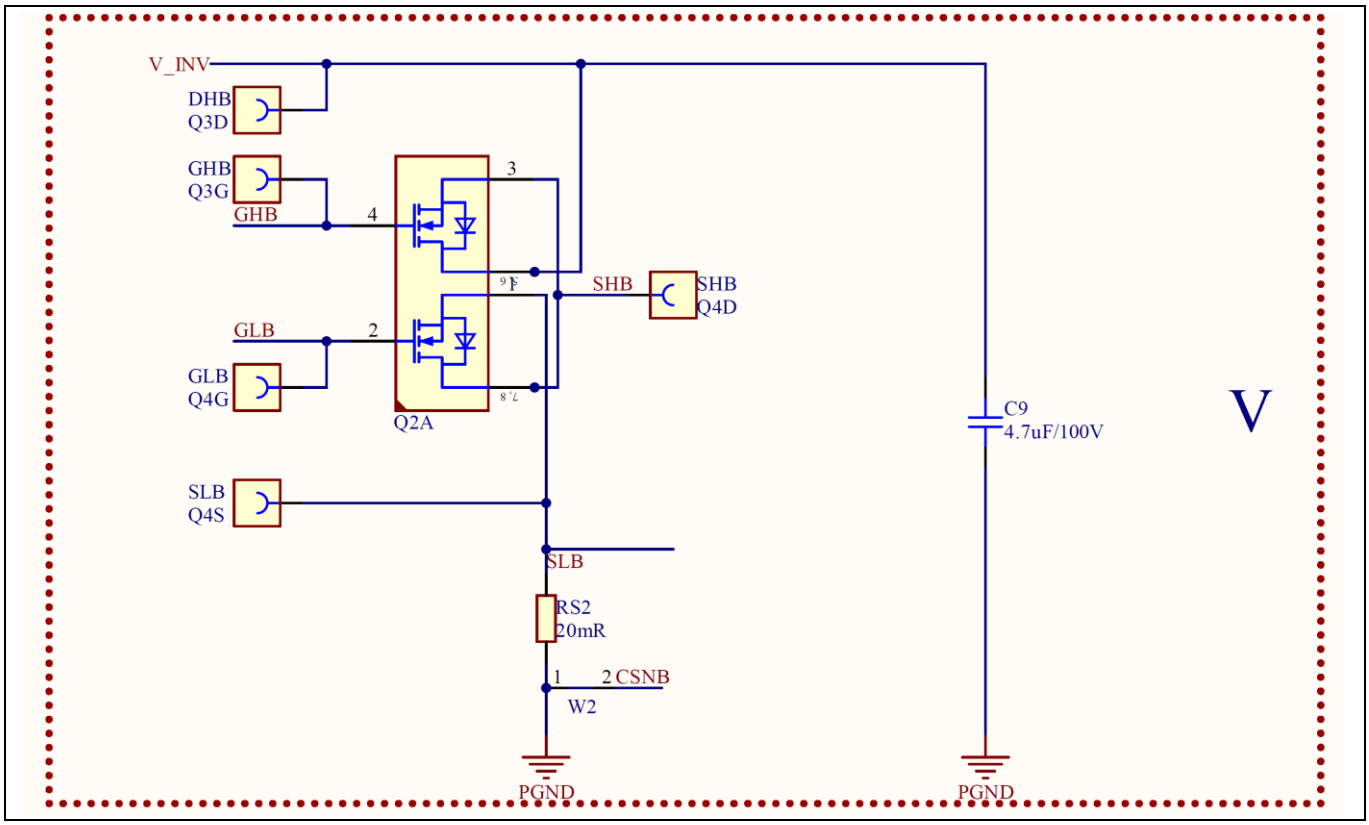

Figure 13 REF_36V_220W_SLFOC – MOTIX™ - power stage, phase “V”

Schematics and PCB layout

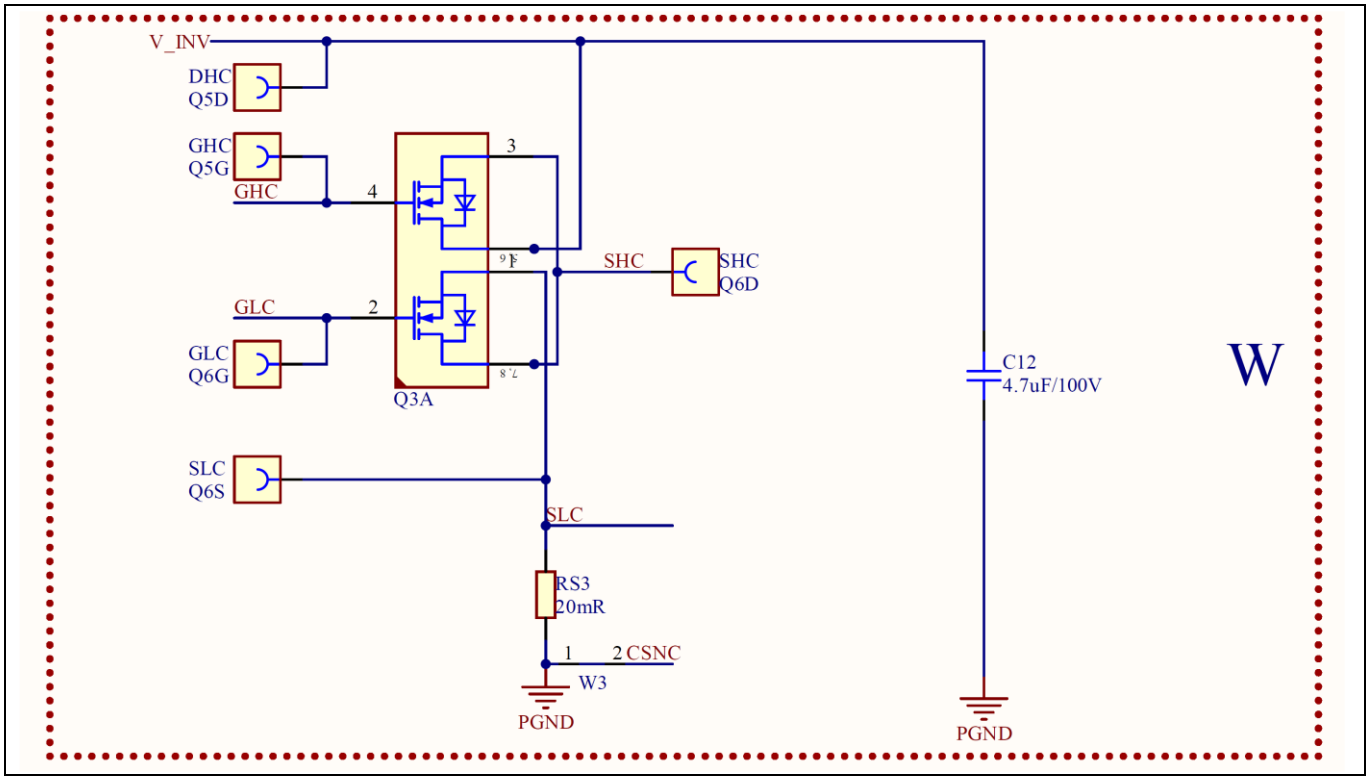

Figure 14 REF_36V_220W_SLFOC – MOTIX™ - power stage, phase “W”

Schematics and PCB layout

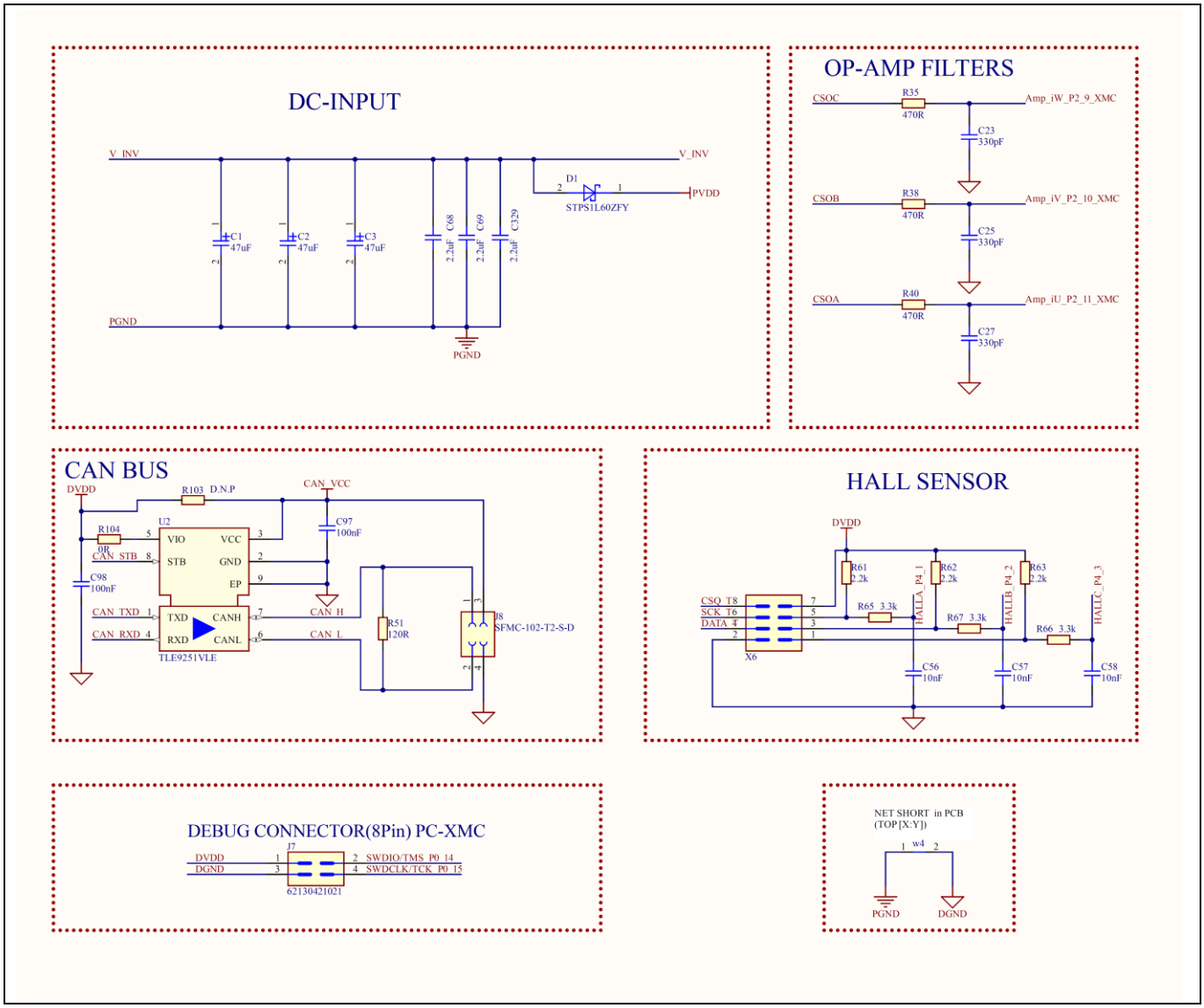

Figure 15 REF_36V_220W_SLFOC – MOTIX™ - power supply, opamp filters, CAN bus, Hall sensor, and programming/debug connector for IMD701A

4.2 PCB layout

The REF_36V_220W_SLFOC reference board utilizes a four-layer PCB with 2 oz. copper. Components are mounted on the top and bottom sides. The board has a round shape with the diameter of 40 mm. It is a compactable board for being easy to install into the motor that has a diameter of 42 mm.

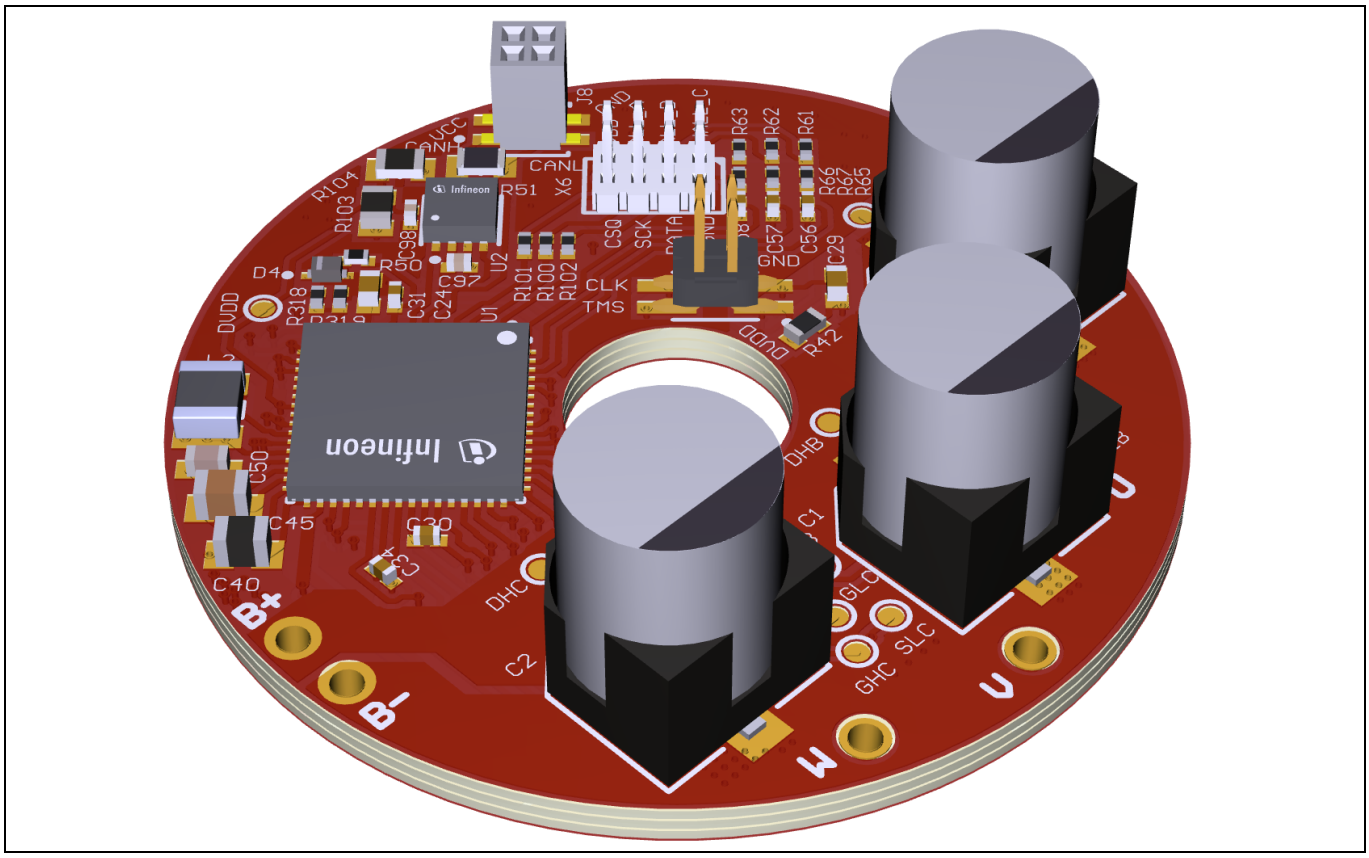

Figure 16 REF_36V_220W_SLFOC - MOTIX™ - 3D view

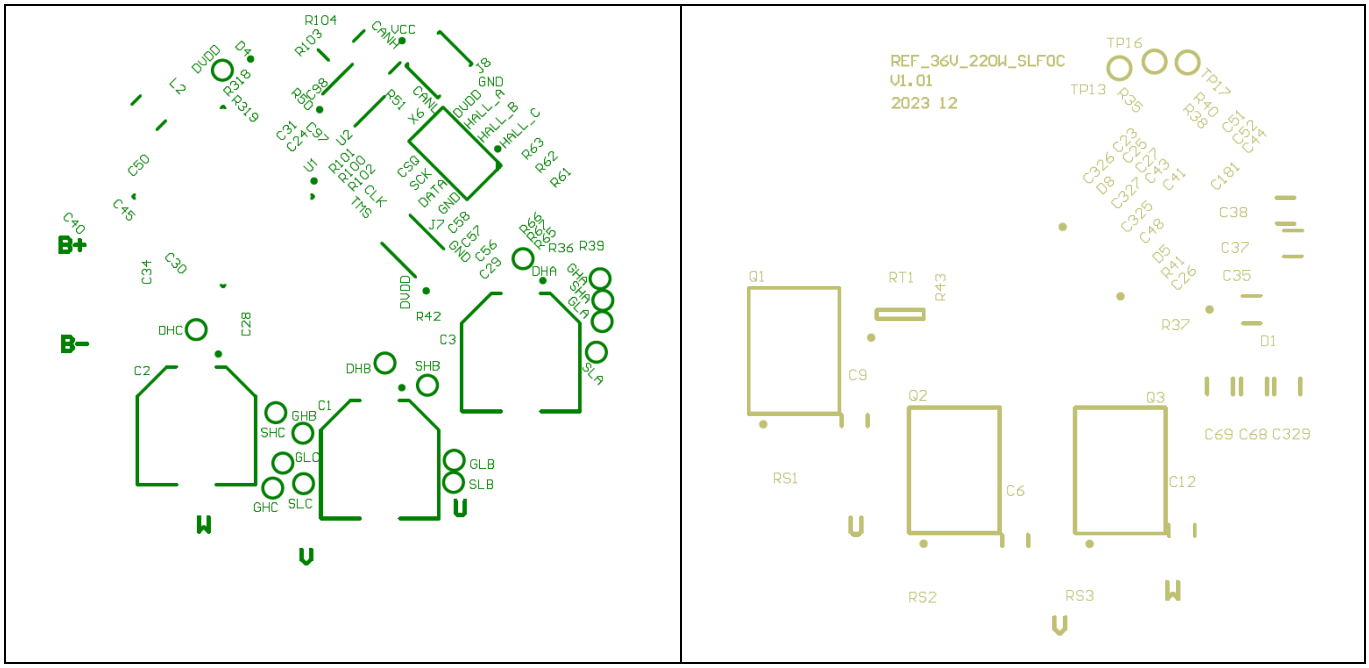

Figure 17 REF_36V_220W_SLFOC - MOTIX™ - TOP silkscreen and BOT silkscreen

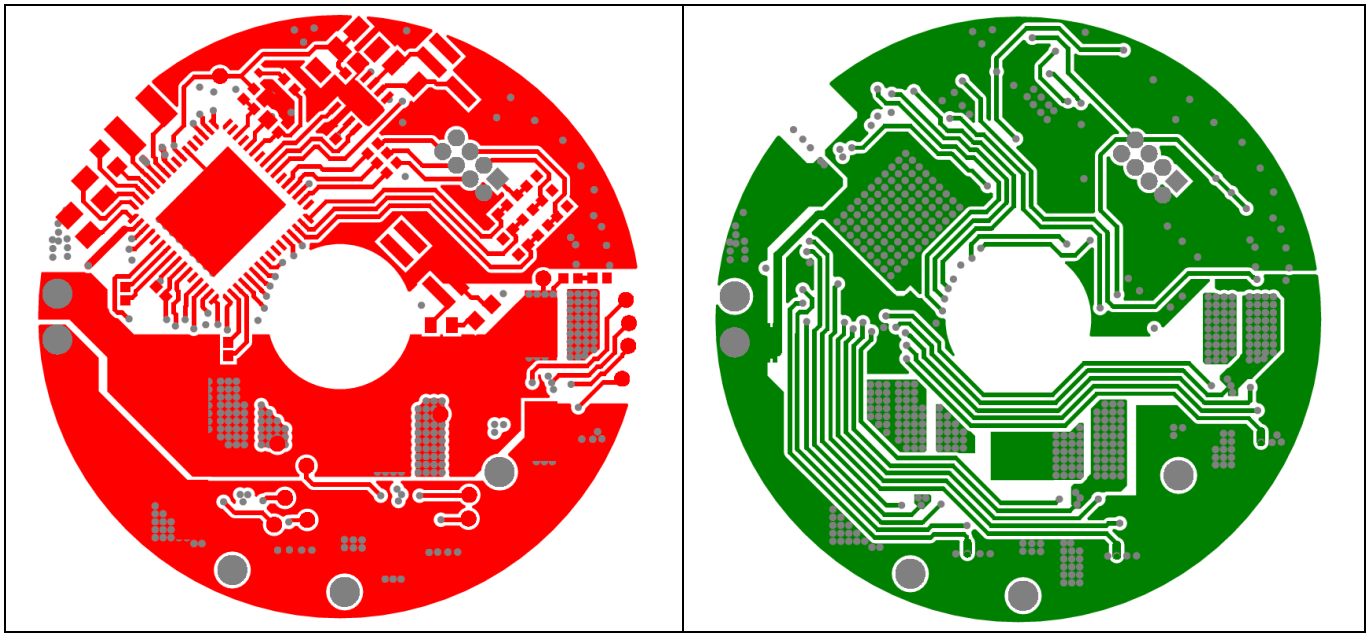

Figure 18 REF_36V_220W_SLFOC – MOTIX™ - TOP layer (left) and MID1 layer (right)

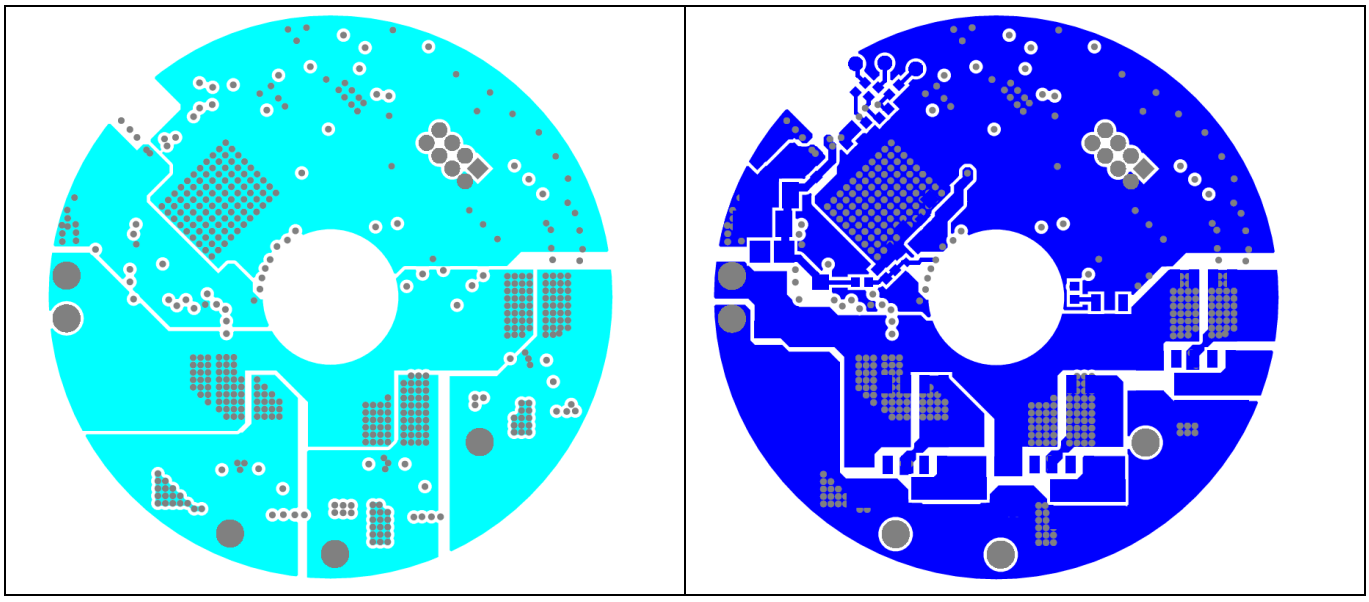

Figure 19 REF_36V_220W_SLFOC - MOTIX™ - MID2 layer (left) and BOT layer (right)

The PCB layout is optimized to minimize radiated EMI. This is done by keeping the loops carrying the switching currents as small as possible. The high frequency (HF) switching current loops are illustrated in Figure 20. Note that during the switching transition, the high-side gate drive loop current returns to the main ground rather than back to the gate driver as in a conventional high-side driver. Because this is the case, the high-side gate drive loop should also be kept as tight as possible. The bottom layer connects the DC bus to the top-side MOSFET drains and at the same layer returns the MOSFET current via the CS shunt. The switching loop for each phase begins and ends at the electrolytic capacitor and HF decoupling capacitors.

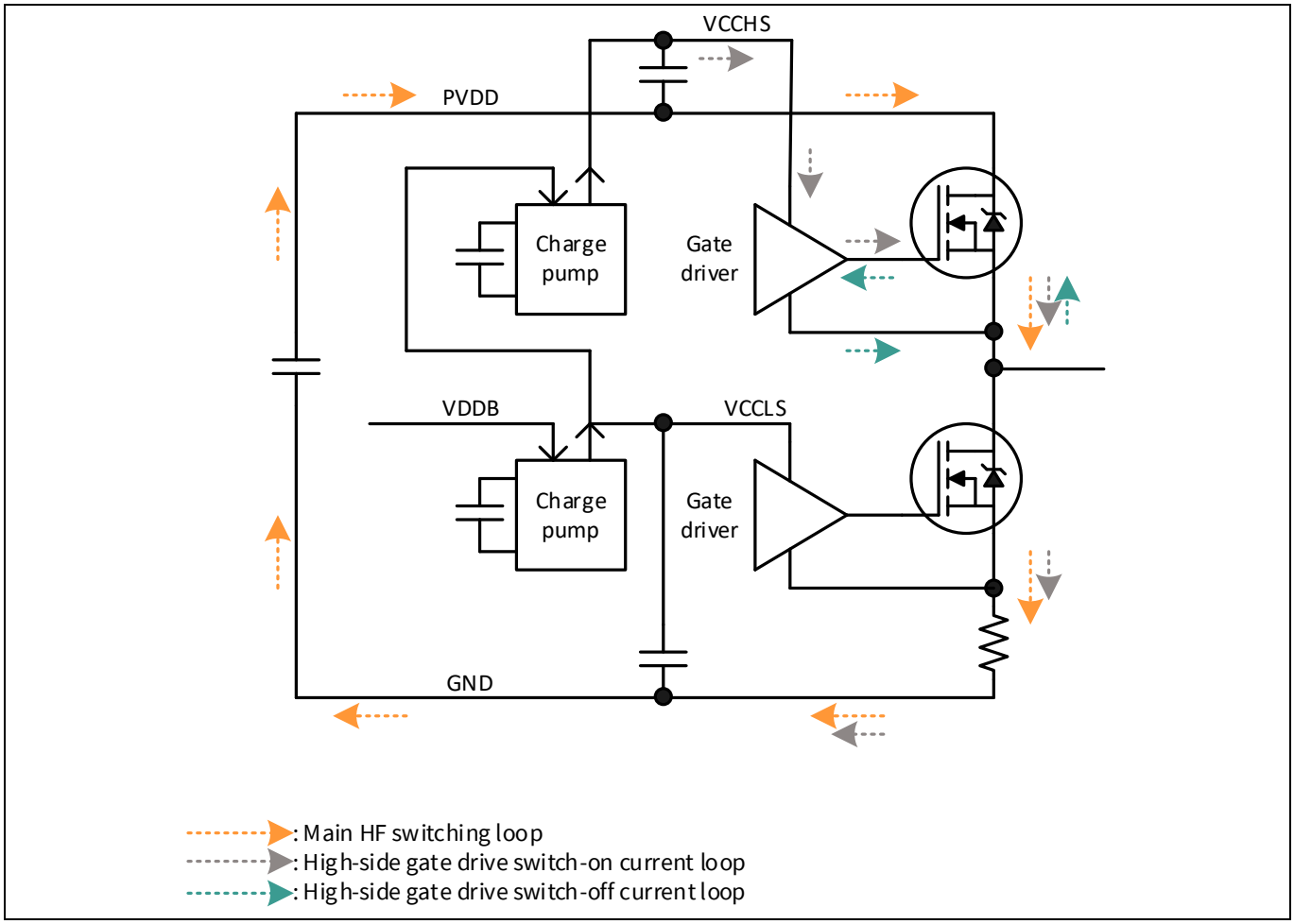

Figure 20 HF current loop for one phase

4.3 Bill of materials (BOM)

Table 3 BOM

Reference	Qty	Value/rating	Manufacturer	Part number
C1, C2, C3	3	47 uF/ 63 V /radial	Nippon Chemi-Con	EMVE630ARA470MHA0G
C181	1	100 nF / 100 V/ X5R/ 0402	Murata	GRM155R62A104KE14D
C23, C25, C27	3	330 pF/ 25 V/ NP0/ 0402	Murata	GRM1555C1E331JA01
C24	1	10 nF/ 25 V/ X7R/ 0402	Murata	GRM155R71E103KA01
C26, C41, C44, C325, C326	5	100 nF/ 25 V/ X7R/ 0402	Murata	GRM155R71E104KE14
C28, C30, C34	3	100 pF/ 25 V/ NP0/ 0402	Murata	GRM1555C1E101JA01
C29, C31	2	1 uF/ 25 V/ X5R/ 0603	Murata	GRM185R61E105KA12
C35	1	1 uF/ 100 V/ X7S/ 0805	Murata	GRJ21BC72A105KE11L
C37, C38	2	4.7 uF/ 100 V/ X7S/ 1206	Kyocera	12061Z475KAT2A
C40	1	4.7 uF/ 25 V/ X5R/ 0805	Würth Electronik	885012107018
C43, C48, C327	3	10 uF/ 16 V/ X5R/ 0603	Murata	GRM188R61C106KAALD

Schematics and PCB layout

Reference	Qty	Value/rating	Manufacturer	Part number
C45	1	470 nF/ 100 V/ X7S/ 0805	TDK Corporation	CGA4J3X7S2A474K125AB
C50	1	470 nF/ 25 V/ X7R/ 0603	Murata	GCM188R71E474KA64
C51, C52	2	22 uF/ 16 V/ X5R/ 0603	Samsung	CL10A226MO7JZNC
C56, C57, C58	3	10 nF/ 25 V/ X7R/ 0402	Murata	GCM155R71E103KA37
C6, C9, C12	3	4.7 uF/ 100 V/ X7S/ 1206	Murata	GRM31CC72A475KE11K
C68, C69, C329	3	2.2 uF/ 100 V/ X7R/ 1206	Murata	GRM31CR72A225KA73
C97, C98	2	100 nF/ 16 V/ X7R/ 0402	Kemet	C0402C104K4RAC
D1	1	Schottky/ 60 V/ 1 A/ SOD-123-2	STMicroelectronics	STPS1L60ZFY
D4, D5, D8	3	Zener/ 5.1V/ 500mW/ SOD-523	ON Semiconductor	MM5Z5V1T1G
J7	1	Header/ 4-pos/ 1.27 pitch	Würth Electronik	62130421021
J8	1	Connector/ 4 pins/ 1.27 pitch	Samtec	SFMC-102-T2-S-D
L2	1	10 uH/ 1.1 A/ 1210	Murata	DFE322512F-100M=P2
Q1, Q2, Q3	3	N-channel/ 60 V/ 42A/ Dual N+N	Infineon Technologies	BSC155N06ND
R100, R101, R43	3	100R/ 63 mW/ 0402/ 1%	Vishay	CRCW0402100RFK
R103, R104	2	0R/ 500 mW/ 0805	Vishay	CRCW08050000Z0EAHP
R318	1	32.4k/ 63 mW/ 0402/ 1%	Vishay	CRCW040232K4FK
R319	1	3.3k/ 63 mW/ 0402/ 1%	Vishay	CRCW04023K30FK
R35, R38, R40, R102	4	470R/ 63 mW/ 0402/ 1%	Vishay	CRCW0402470RFK
R36	1	75k/ 63mW/ 0402/ 1%	Vishay	CRCW040275K0FK
R37	1	100k/ 63 mW/ 0402/ 1%	Vishay	CRCW0402100KFK
R39	1	4.7k/ 63 mW/ 0402/ 1%	Vishay	CRCW04024K70FKED
R41	1	22k/ 63 mW/ 0402/ 1%	Vishay	CRCW040222K0FK
R42	1	200R/ 100 mW/ 0603/ 1%	Vishay	CRCW0603200RFK
R50	1	0R/ 63 mW/ 0402/ 5%	ROHM Semiconductors	SFR01MZPJ000
R51	1	120R/ 125 mW/ 0805/ 1%	Vishay	CRCW0805120RFK
R61, R62, R63	3	2.2k/ 63 mW/ 0402/ 1%	Vishay	CRCW04022K20FK
R65, R66, R67	3	3.3k/ 63 mW/ 0402/ 1%	Vishay	CRCW04023K30FK

Schematics and PCB layout

Reference	Qty	Value/rating	Manufacturer	Part number
RS1, RS2, RS3	3	20 mR/ 2 W/ 2010/ 1%	Panasonic	ERJ-B1CFR02U
RT1	1	Sensor 40°C/ 125°C/ SOT-23-3	Microchip Technology	MCP9700T-E/TT
U1	1	Smart IC/ three-phase motor driver	Infineon Technologies	IMD701AQ064X128AAXUMA1
U2	1	HS CAN transceiver	Infineon Technologies	TLE9251VLE
X6	1	Header/ 4-pos/ 1.27 pitch /dual row	Sullins	GRPB042VWVN-RC

5 Firmware configuration

General configurations such as control scheme, hardware board parameters, and the motor parameters can be configured in this section. The configuration options are available in the file *PMSM_FOC\Configuration\pmsm_foc_user_input_config_xxx.h*.

_xxx is for differentiating the configurations for different motors.

5.1 Motor group

- `#define USER_MOTOR_R_PER_PHASE_OHM (0.85f)`
  - Defines the motor phase to neutral resistance in Ω.

- `#define USER_MOTOR_LS_PER_PHASE_uH (1414.0f)`
  - Defines the motor phase to neutral stator inductance in uH.
  - For interior permanent magnet synchronous motor (IPMSM) brushless DC motors, q-axis inductance (L_q) is used.

- `#define USER_MOTOR_POLE_PAIR (2.0f)`
  - Number of pole pairs in the motor is used to calculate the electrical RPM of the rotor.

- `#define USER_SPEED_HIGH_LIMIT_RPM (3500U)`
  - This value is used as the maximum allowed target speed. Additional control parameters are calculated from this value.

- `#define USER_SPEED_LOW_LIMIT_RPM (200U)`
  - This value is used as the minimum allowed target speed. In sensorless motor control, it is important to have high enough speed to measure and estimate the module parameters. The minimum speed is application and motor dependent.

- `#define NO_LOAD_SPEED_RPM (8000.0f)`
  - This value is used to calculate the back electromotive force (BEMF) constant.

- `#define STALL_TORQUE_NM (0.05f)`
  - Sets an initial stall torque threshold.

- `#define GEAR_RATIO (58.22f)`
  - The gear ratio is defined for wheel position calculation if there is a gearbox on the motor. If there is no gearbox, the value should be 1.0f.

5.2 Board group

- `#define USER_VDC_LINK_V (36.0f)`
  - Defines the inverter DC-link voltage in V. This is the nominal voltage of the inverter.

- `#define USER_CURRENT_AMPLIFIER_GAIN (12.0f)`
  - Defines the current sensing amplifier gain. The gain must be the same as the configuration for 6EDL7141, which is configured in the *MCUInit\6EDL_gateway.c* file.

Firmware configuration

- `#define USER_MAX_ADC_VDD_V (5.0f)`
  - Defines the maximum voltage at ADC.

- `#define USER_R_SHUNT_OHM (0.020f)`
  - Defines the phase current-sensing shunt resistor in Ω.

5.3 System group

- `#define USER_SLOW_CTRL_LOOP_PERIOD_uS (1000.0F)`
  - Slow control loop scheduler interrupt period.

- `#define VOLTAGE_DIVIDER_R_HIGH (75.0f)`
- `#define VOLTAGE_DIVIDER_R_LOW (4.7f)`
- `#define USER_VDC_LINK_DIVIDER_RATIO (VOLTAGE_DIVIDER_R_LOW/(VOLTAGE_DIVIDER_R_HIGH+VOLTAGE_DIVIDER_R_LOW))`
  - DC-link voltage sensing resistor-divider high-side and low-side values. It depends on the actual value on the predefined board. The calculation of the ratio for DC-link voltage divider should not be changed. It is fixed as R2/(R2+R1).

- `#define USER_DRIVERIC_DELAY_US (0.2f)`
  - Configuration for the driver IC propagation delay. It affects the ADC trigger point.

- `#define USER_BOOTSTRAP_PRECHARGE_TIME_MS (100U)`
  - Initial bootstrap pre-charging time.

- `#define USER_ROTOR_PRE_ALIGN_METHOD (ROTOR_PRE_ALIGNMENT)`

Options:

  - ROTOR _PRE_ALIGNMENT
  - ROTOR_PRE_ALIGN_NONE

`#define USER_MOTOR_STARTUP_METHOD (MOTOR_STARTUP_DIRECT_FOC)`

  - See Section 3.2 for more information on the startup method.

Options:

  - MOTOR_STARTUP_DIRECT_FOC
  - MOTOR_STARTUP_VF_OPEN_LOOP

- `#define USER_ROTOR_PRE_ALIGNMENT_V_RAMP_RATE (30.0F)`
  - Defines the pre-alignment voltage ramp rate in V/s.

- `#define USER_ROTOR_PRE_ALIGNMENT_VOLTAGE_V (1.2F)`
  - Defines the pre-alignment voltage in volts. It should be less than `USER_VDC_LINK_V`.

- `#define USER_ROTOR_PRE_ALIGNMENT_TIME_MS (200.0F)`
  - Defines the rotor start-up alignment time in ms. Minimum range is the PWM period.

Firmware configuration

- `#define USER_VQ_INITIAL_VALUE_V (2.3F)`
  - V_q value initial value based on load and maximum current.

- `#define USER_VQ_TARGET_VALUE_V (uint32_t) (32767.0F * (USER_VQ_INITIAL_VALUE_V * 1.2F) / (USER_VDC_LINK_V / USER_SQRT_3_CONSTANT))`
  - V_q target value during startup. It is 1.2 times of the V_q initial value for this instance. The inline value “1.2” can be changed according to the tuning result.

- `#define USER_FOC_CTRL_SCHEME (SPEED_INNER_CURRENT_CTRL)`
  - Defines the control scheme. SPEED_INNER_CURRENT_CTRL must be enabled for speed and position control schemes. Position control is not listed in the options because it is enabled with the GUI with the variable “PMSM_FOC_POSITION_CTRL.position_ctrl_enabled”. It can be customized for target application.

Options:

  - SPEED_INNER_CURRENT_CTRL
  - VQ_VOLTAGE_CTRL
  - VF_OPEN_LOOP_CTRL

- `#define USER_MOTOR_BI_DIRECTION_CTRL (ENABLED)`
  - If enabled, the motor can run with the rotor angle increasing or decreasing. It should be enabled for position control, because many wheel applications need a bi-direction control feature.

Options:

  - ENABLED
  - DISABLED

- `#define USER_REF_SETTING (DISABLED)`
  - Defines the reference setting method of using the board’s potentiometer for speed or V_q voltage. Disable this option for this reference board.

Options:

  - ENABLED
  - DISABLED

- `#define USER_TH_POT_ADC (10U)`
  - Threshold POT ADC in which motor can enter or exit motor idle state. The range of the ADC results is from 0 to 4095. It can be configured according to the application.

- `#define USER_POT_ADC_LPF (3U)`
  - POT ADC filter coefficient configuration.

5.4 Protection group

- `#define USER_VDC_UV_OV_PROTECTION (ENABLED)`

Options:

  - ENABLED
  - DISABLED

- `#define USER_OVERCURRENT_PROTECTION (DISABLED)`

Options:

  - ENABLED
  - DISABLED

- `#define USER_WATCH_DOG_TIMER (DISABLED)`

Options:

  - ENABLED
  - DISABLED

- `#define USER_VDC_OVER_LIMIT ((uint16_t)(((USER_VDC_LINK_V * USER_VDC_LINK_DIVIDER_RATIO)/USER_MAX_ADC_VDD_V) * (1<<12) * 140.0 / 100.0))`
- `#define USER_VDC_MIN_LIMIT ((uint16_t)(((USER_VDC_LINK_V * USER_VDC_LINK_DIVIDER_RATIO)/USER_MAX_ADC_VDD_V) * (1<<12) * 60.0 / 100.0))`
  - Defines the threshold for OVP and UVP. Default value is ± 40% of `USER_VDC_LINK_V`.

5.5 PWM group

- `#define USER_CCU8_PWM_FREQ_HZ (20000U)`
  - This macro defines the PWM frequency in Hz. This is the fastest loop in this code example. The main tasks of the FOC are done in this loop or fractions of it.

- `#define USER_DEAD_TIME_US (0.75f)`
  - This macro defines the dead-time in µs. This value has to be defined according to the switches and bridge drivers. If the dead-time value is set too small, it will lead to a short from high-side MOSFET to low-side MOSFET. A high dead-time value reduces the maximum voltage that can be applied. In default settings, the same dead-time is applied to the rising and falling edge. If not compensated for, the dead-time adds a constant error.

- `#define USER_CCU8_PASSIVE_LEVEL_OUT0 CCU8_PASSIVE_LOW`
  - PWM output passive level required for driver IC for high-side.

- `#define USER_CCU8_PASSIVE_LEVEL_OUT1 CCU8_PASSIVE_LOW`
  - PWM output passive level required for driver IC for low-side.

- `#define USER_CCU8_INPUT_TRAP_LEVEL XMC_CCU8_SLICE_EVENT_LEVEL_SENSITIVITY_ACTIVE_LOW`
  - Traps the signal input level selection for CTrap to occur.

5.6 Control loop group

Transition start-up (open-loop to closed-loop) mode parameters

- `#define USER_VF_OFFSET_V (0.5f)`
  - Offsets the voltage for the transition start-up mode. The initial torque is applied with this configuration.

- `#define USER_VF_V_PER_HZ (0.08f)`
  - V/f open-loop control start-up slew rate in V/Hz.

- `#define USER_VF_TRANSITION_SPEED_RPM (500)`
  - Defines the threshold speed to transit from open-loop control to closed-loop control.

- `#define USER_VF_SPEED_RAMPUP_RATE_RPM_PER_S (100U)`
  - V/f open-loop control start-up ramp-up rate in RPM/S.

V_q voltage control scheme configuration

- `#define USER_VQ_REF_HIGH_LIMIT_V (USER_VDC_LINK_V / USER_SQRT_3_CONSTANT)*1.15`
  - Defines the limit of the reference torque voltage. The maximum voltage reference is defined as the DC-link voltage divided by the square root of 3, multiplied by 1.15 to cater for over-modulation.

- `#define USER_VQ_REF_LOW_LIMIT_V (0.2f)`
  - Sets the minimum V_q reference voltage required for the motor to operate in a closed-loop.

- `#define USER_VQ_RAMPUP_STEP (5U)`
  - V_q voltage increment step in target count.

- `#define USER_VQ_RAMPDOWN_STEP (5U)`
  - V_q voltage decrement step in the target count.

- `#define USER_VQ_RAMP_SLEWRATE (10U)`
  - USER_VQ_RAMP_SLEWRATE x PWM period, every cycle increase USER_VQ_RAMPUP_STEP or USER_VQ_RAMPDOWN_STEP.

Speed inner current control scheme configuration

- `#define USER_SPEED_REF_HIGH_LIMIT_RPM (USER_SPEED_HIGH_LIMIT_RPM)`
  - Defines the user speed reference upper limit.

- `#define USER_SPEED_REF_LOW_LIMIT_RPM (USER_SPEED_LOW_LIMIT_RPM)`
  - Defines the user speed reference lower limit.

- `#define USER_SPEED_RAMPUP_RPM_PER_S (20U)`
- `#define USER_SPEED_RAMPDOWN_RPM_PER_S (30U)`
- `#define USER_SPEED_RAMP_SLEWRATE ((int32_t)(0.01f/(1.0f/USER_CCU8_PWM_FREQ_HZ)))`
  - USER_SPEED_RAMP_SLEWRATE x PWM period, every cycle increase USER_SPEED_RAMPUP_RPM_PER_S or decrease USER_SPEED_RAMPDOWN_RPM_PER_S.

Firmware configuration

- For example, it is for 0.01 seconds in this configuration.

SVM switching sequences

- `#define USER_SVM_SWITCHING_SCHEME (STANDARD_SVM_5_SEGMENT)`

Options:

- STANDARD_SVM_7_SEGMENT
- STANDARD_SVM_5_SEGMENT

- `#define USER_SVM_SINE_LUT_SIZE (1024U)`

Defines the lookup table (LUT) array size.

Options:

- 256U
- 1024U

- `#define USER_SCALE_UP_SINE_LUT (10U)`
  - Scales up the LUT by 10 to increase the resolution.

- `#define USER_VDC_VOLT_COMPENSATION (ENABLED)`

DC bus voltage compensation.

Options:

- ENABLED
- DISABLED

ADC and motor phase current offset calibration

- `#define USER_ADC_CALIBRATION (ENABLED)`
  - ADC start-up calibration.

Options:

- ENABLED
- DISABLED

- `#define USER_MOTOR_PH_OFFSET_CALIBRATION (ENABLED)`
  - Motor phase current offset calibration.

Options:

- ENABLED
- DISABLED

Firmware configuration

- `#define USER_DQ_DECOUPLING (DISABLED)`

Options:

  - ENABLED
  - DISABLED

PLL observer setting

- `#define USER_PLL_LPF (2)`
  - PLL estimator filter coefficient.
- Options:
  - 0: Filter disabled
  - >0: Filter enabled

- `#define USER_PLL_SPEED_LPF (2)`
  - PLL estimator speed filter coefficient.
- Options:
  - 0: Filter disabled
  - >0: Filter enabled

Braking configuration

- `#define USER_MOTOR_BRAKE_DUTY (60U)`
  - Defines the brake duty percentage. For example, setting 100 for strong brake and 10 for weak brake.

- `#define USER_BRAKING_VDC_MAX_LIMIT (115U)`
  - Defines the percentage of the DC-link voltage for voltage clamping during the brake.

Configuration to enable or disable Micrium/MicroInspector

- `#define USER_UCPROBE_GUI (ENABLED)`

Options:

  - ENABLED
  - DISABLED

- `#define USER_UCPROBE_OSCILLOSCOPE (DISABLED)`

Options:

  - ENABLED
  - DISABLED

Firmware configuration

Configuration of GUI 6EDL_SPI_LINK code

- `#define GUI_6EDL7141_INTEGRATION (SWD_MODE)`

Options:

  - DISABLED
  - SWD_MODE

PI controller parameters

- `#define USER_PI_SPEED_KPP (16000)`
  - Defines the proportional gain K_p of the speed controller.
- `#define USER_PI_SPEED_KII (1)`
  - Defines the integral gain K_i of the speed controller.
- `#define USER_PI_SPEED_SCALE_KPKII (8+USER_RES_INC)`
  - Defines the K_p and K_i scale of the speed controller.
- `#define USER_PI_PLL_KP (150)`
  - Defines the proportional gain K_p of the PLL observer.
- `#define USER_PI_PLL_KI (1)`
  - Defines the integral gain K_i of the PLL observer.
- `#define USER_PI_PLL_SCALE_KPKI (10)`
  - Defines the K_p and K_i scale of the PLL observer.
- `#define PLL_KP_MAX (800)`
- `#define PLL_KP_MIN (20)`
- `#define PLL_TUNING_RATIO_Q12 (int32_t)(-(int32_t)(PLL_KP_MAX - PLL_KP_MIN) * (1 << 12) / (int32_t)(USER_SPEED_HIGH_LIMIT_RPM - USER_SPEED_LOW_LIMIT_RPM))`
  - Defines the parameters for on-line PLL tuning. The parameters are fine-tuned for high and low speeds.
- `#define USER_PI_SPEED_UK_LIMIT_MIN (0)`
  - Defines the minimum output of the speed controller.
- `#define USER_PI_SPEED_UK_LIMIT_MAX (32767)`
  - Defines the maximum output of the speed controller.
- `#define USER_PI_TORQUE_UK_LIMIT_MIN (-8000)`
  - Defines the minimum output of the torque controller.
- `#define USER_PI_TORQUE_UK_LIMIT_MAX (38000)`
  - Defines the maximum output of the torque controller.

Firmware configuration

- `#define USER_PI_FLUX_UK_LIMIT_MIN (-32768)`
  - Defines the minimum output of the flux controller.

- `#define USER_PI_FLUX_UK_LIMIT_MAX (5000)`
  - Defines the maximum output of the flux controller.

PMSM FOC variables scaling

- `#define USER_RES_INC (5U)`
  - This definition increases the calculation resolution for the angle and speed.

- `#define SCALEUP_MPS_K (8U)`
  - Defines the CORDIC scaling.
- `#define SPEED_TO_RPM_SCALE (11U)`
  - Defines the scaling for converting the speed value in software to RPM engineering units.

6 Performance

6.1 Motor parameters

Table 4 shows the parameters of the motors for the test.

Table 4 Motor parameters

Parameters	Values		Unit	Notes
	Motor 1	Motor 2		
Nominal input voltage	24	24	V	The input voltage for the test is 36 VDC
Nominal phase current	2.4	8.5	A	–
Pole pairs	2	15	–	–
Phase resistance	0.85	0.202	Ohm	–
Phase Inductance	1414	473	uH	–
Max speed	4500	250	RPM	At 24 VDC
	7100	380	RPM	At 36 VDC

6.2 Maximum power

The maximum power is the power that the board can run continuously without a heatsink.

The board runs the motor at maximum speed. The motor is loaded with a dynamometer to the defined maximum current and keeps running until the temperature is stable. It takes about 10 minutes.

Maximum ratings:

- Input power: 228.3 W
- Input current: 6.409 A
- Output power: 224.6 W
- Output current: 5.201 A
- Key component max temperature
  - IMD701A: 83.3°C
  - MOSFETs: 92.9°C
- Efficiency: 98.397%

Performance

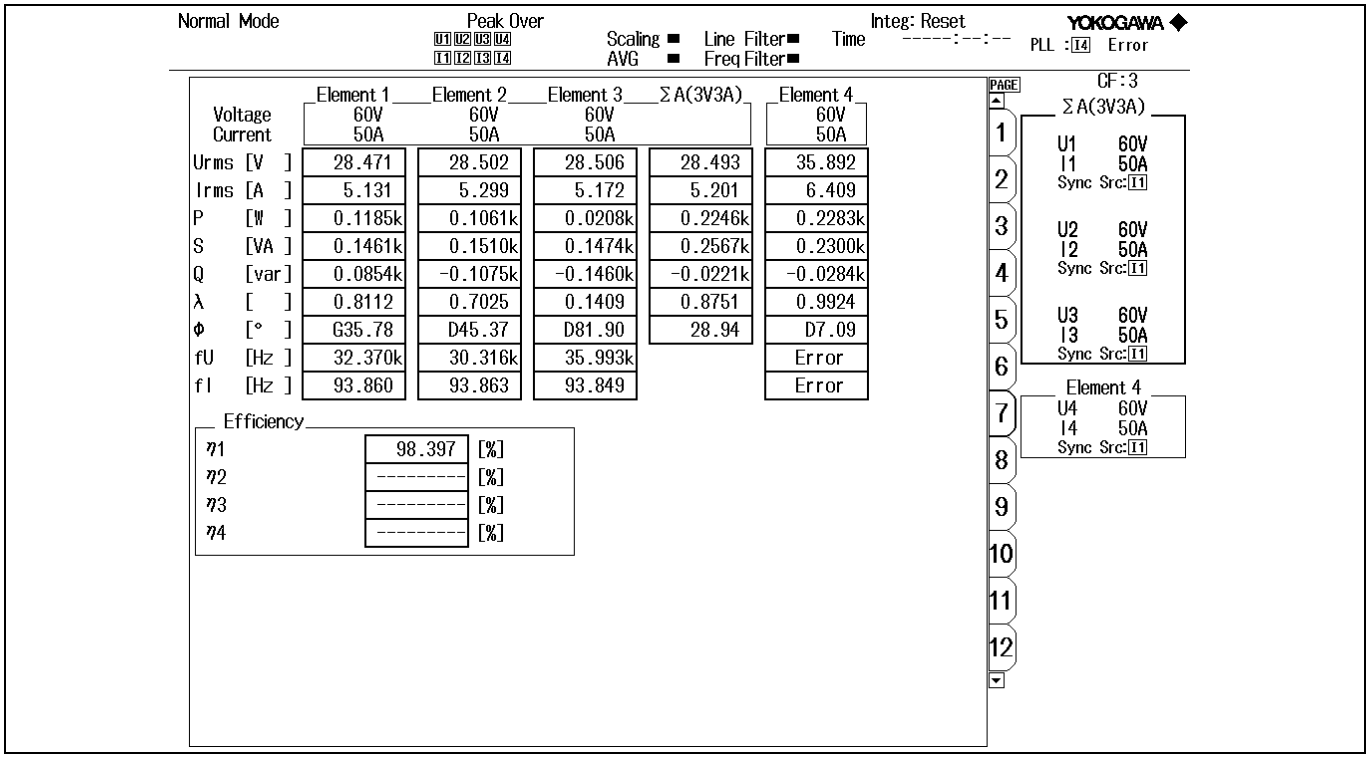

Figure 21 Power analyzer output of the maximum power test

In Figure 21, the Elements 1, 2, and 3 are the output, while Element 4 is the input. ΣA is the summation of the output.

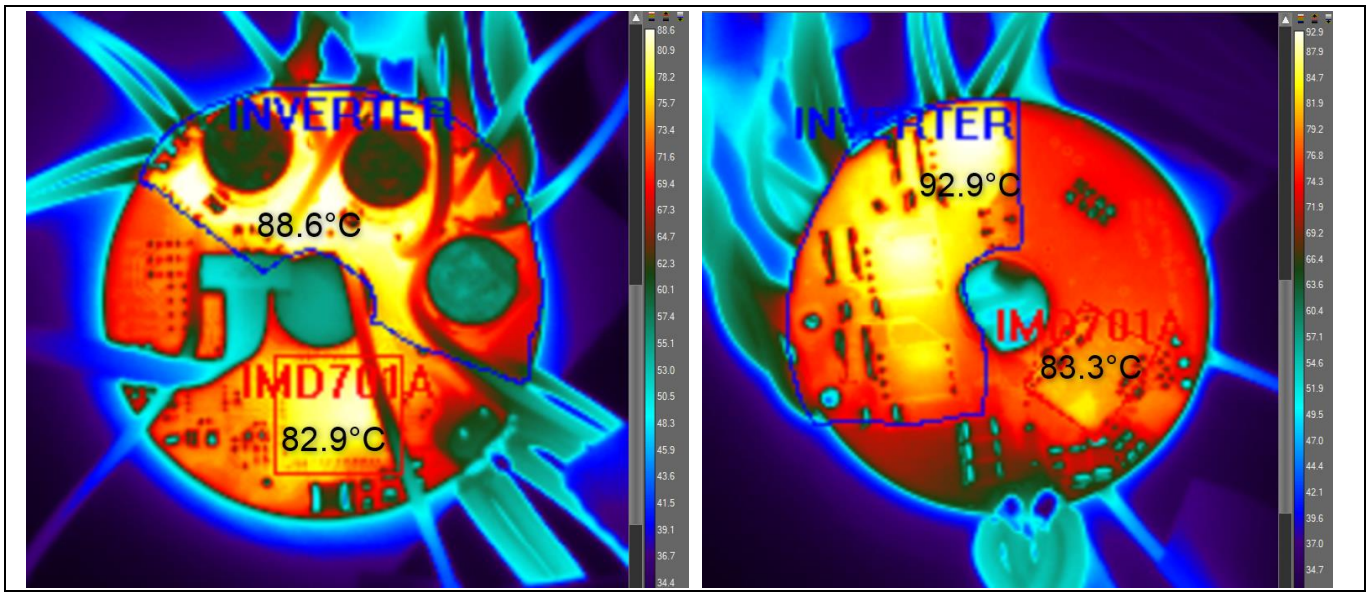

Figure 22 Thermal measurement of the max power test

The thermal measurements are conducted separately for top and bottom sides. Because the IMD701A is mounted on the top-side and the MOSFETs are mounted on the bottom-side.

In Figure 22, the left shows the measurement on the top-side of the board, and the right shows the measurement on the bottom-side of the board.

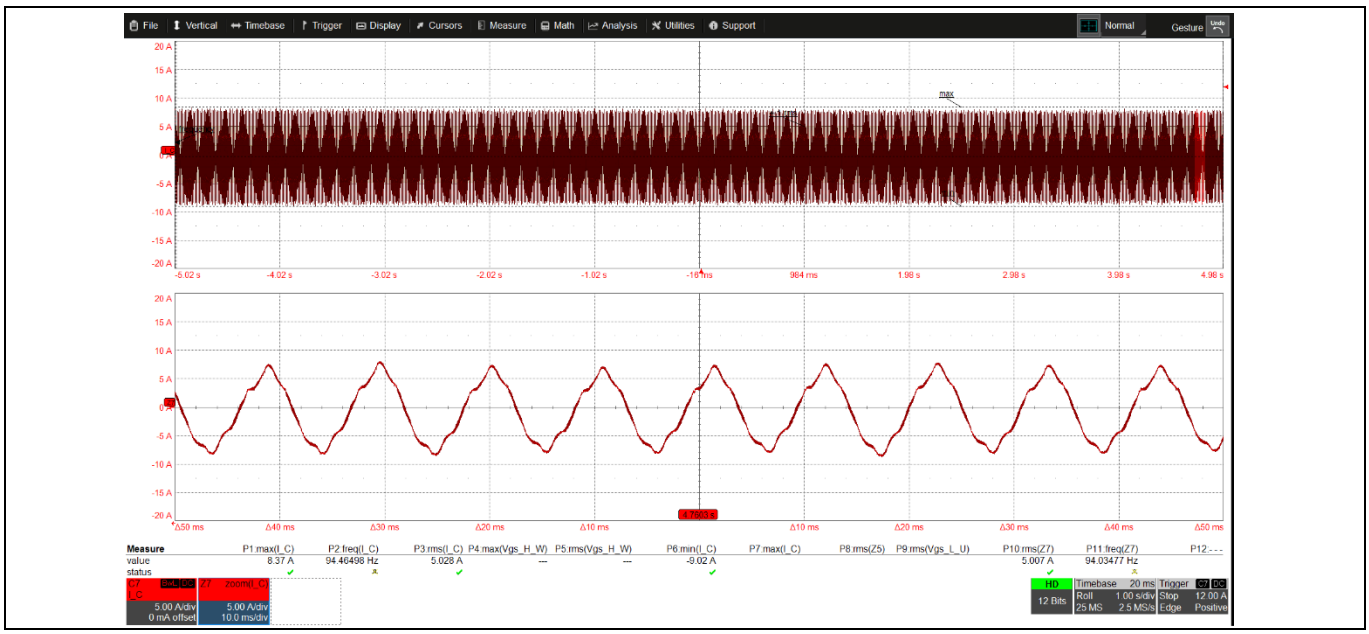

Figure 23 Phase current waveform of the max power test

Figure 23 shows the distortion on the current waveform. The distortion is caused by over modulation, because the maximum output voltage is expected for the maximum power output measurement. The current amplitude is stable at the moment.

6.3 Peak power

The peak power is the power that the board can run for a defined short time without a heatsink.

The board runs the motor at maximum speed. The motor is loaded with a dynamometer to the defined peak current and runs for about 30 seconds.

The test results are:

- Input power: 397.5 W
- Input current: 11.157 A
- Output power: 385.2 W
- Output current: 9.281 A
- Key component max temperature
  - IMD701A: 73.5°C
  - MOSFETs: 117.1°C
- Efficiency: 96.901%

Performance

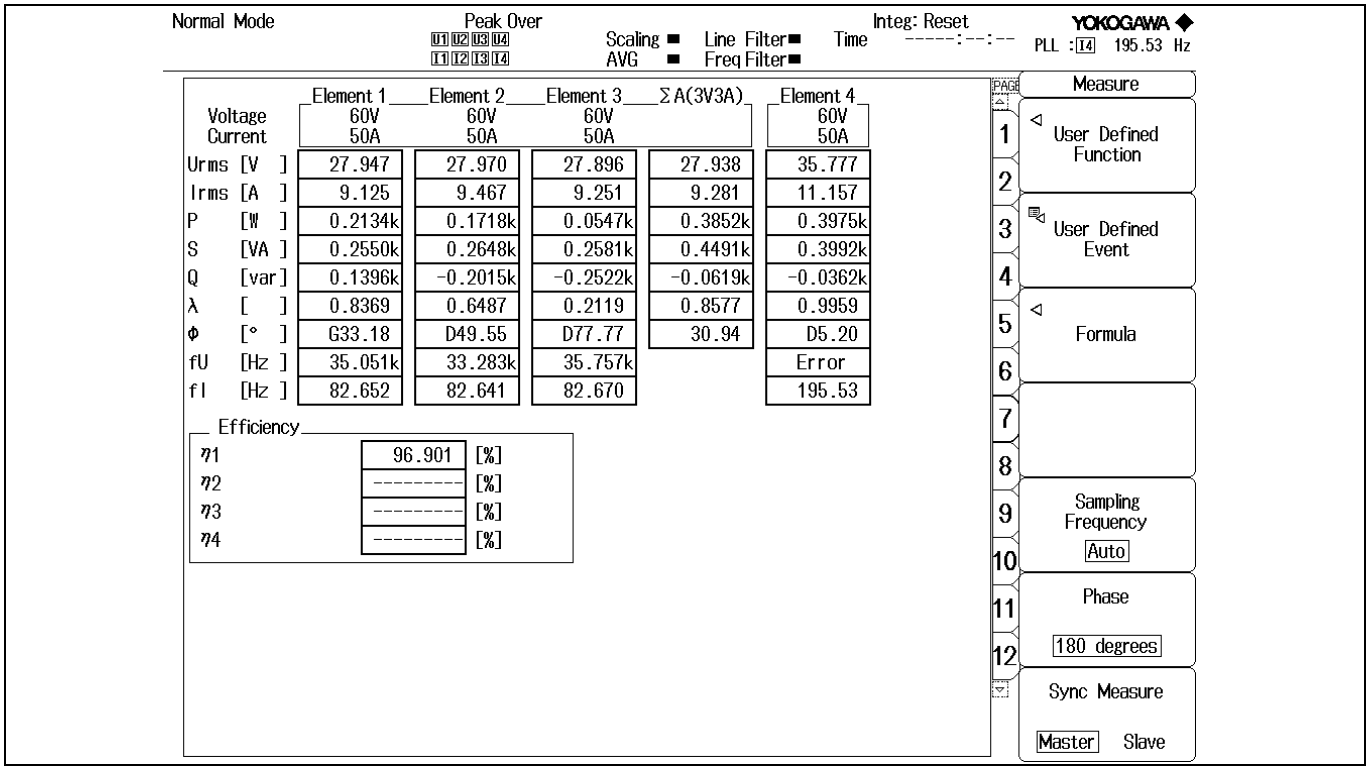

Figure 24 Power analyzer output of the peak power test

In Figure 24, the Elements 1, 2, and 3 are the output, while Element 4 is the input. ΣA is the summation of the output.

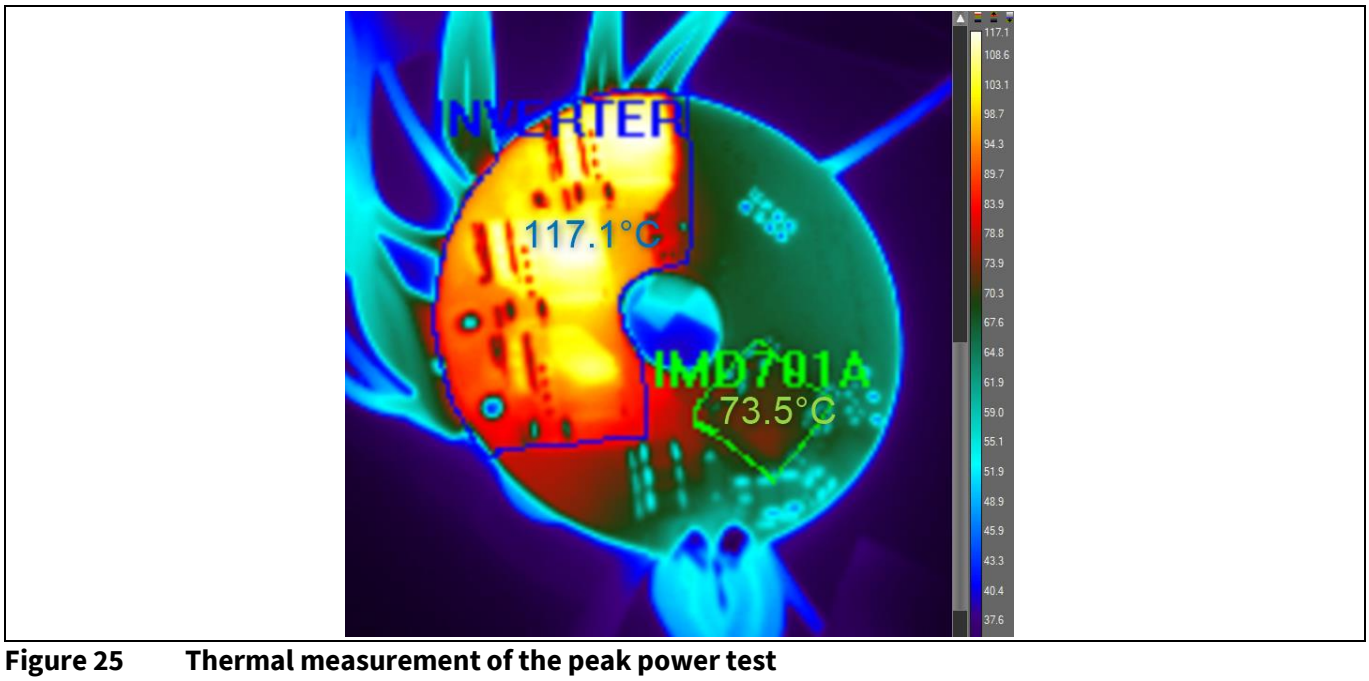

Figure 25 Thermal measurement of the peak power test

The temperature of the MOSFETs and IMD701A keeps increasing until the load is released. The highest temperature on the MOSFET is 117.1°C.

Performance

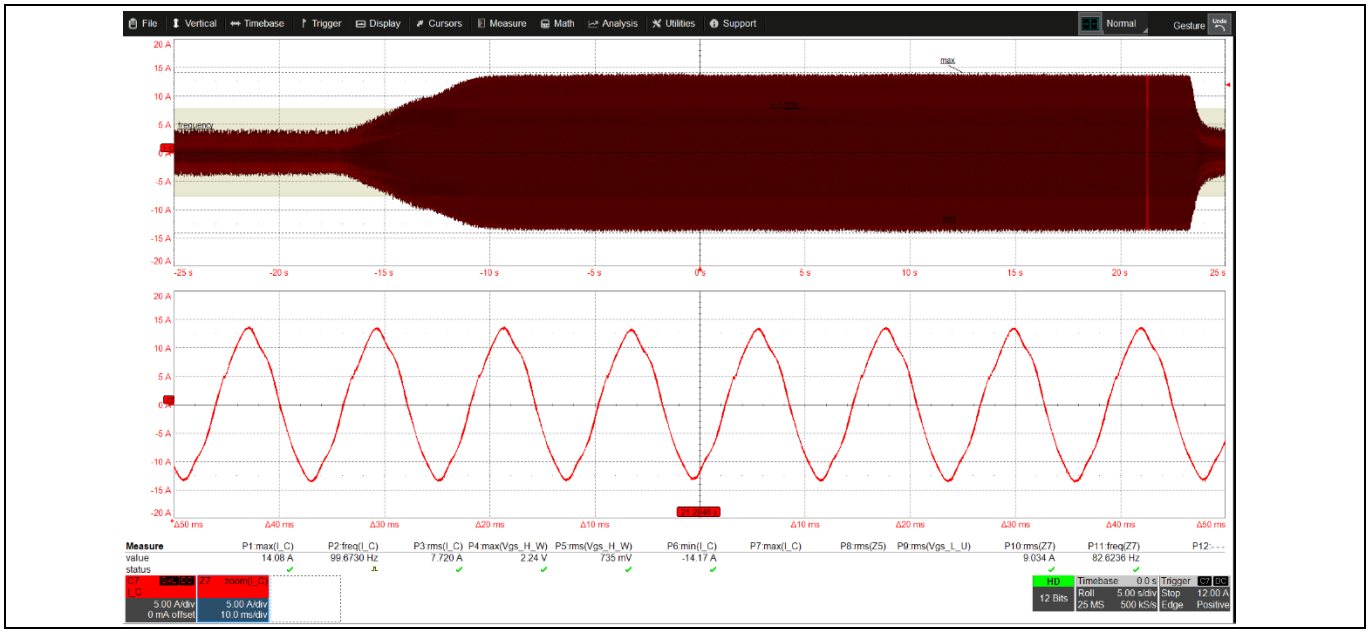

Figure 26 Phase current waveform of the peak power test

Comparing to the motor speed at the maximum power test, the motor speed at the peak power test is decreased a little to ensure the overcurrent protection (OCP) is not triggered. Because of the over-modulation, the current distortion can cause OCP. The OCP threshold is set to be maximum, which is 300 mV. When the shunt resistance is 20 mΩ, the current threshold is 15 A.

6.4 MOSFET slew rate configuration

Control of MOSFET VDS rise and fall times is one of the most important parameters for optimizing drive systems, affecting critical factors such as:

- Switching losses
- Dead time optimization
- VDS ringing with possible avalanche event in MOSFETs. Avalanche is a critical factor in MOSFETs that can lead to device destruction or reliability issues.
- EMI design and optimizations
- Control of negative spike in SHx pins
- Possible snubber design (MOSFET snubber or bridge bypass capacitors)

MOTIX™ 6EDL7141 is capable of adjusting the slew rate of the MOSFET switching (VDS). Slew rate control functionality controls independently the rise (low to high) and fall (high to low) slew rates of the drain-to-source voltage by adjusting the gate current applied to the MOSFET gate.

6.4.1 MOSFET slew rate relative parameter calculation

It is convenient to get the slew rate relative parameter from the **6EDL71x1 MOSFET Slew Rate Configurator**.

- Open the MOTIX™ BPA Motor Control Workbench

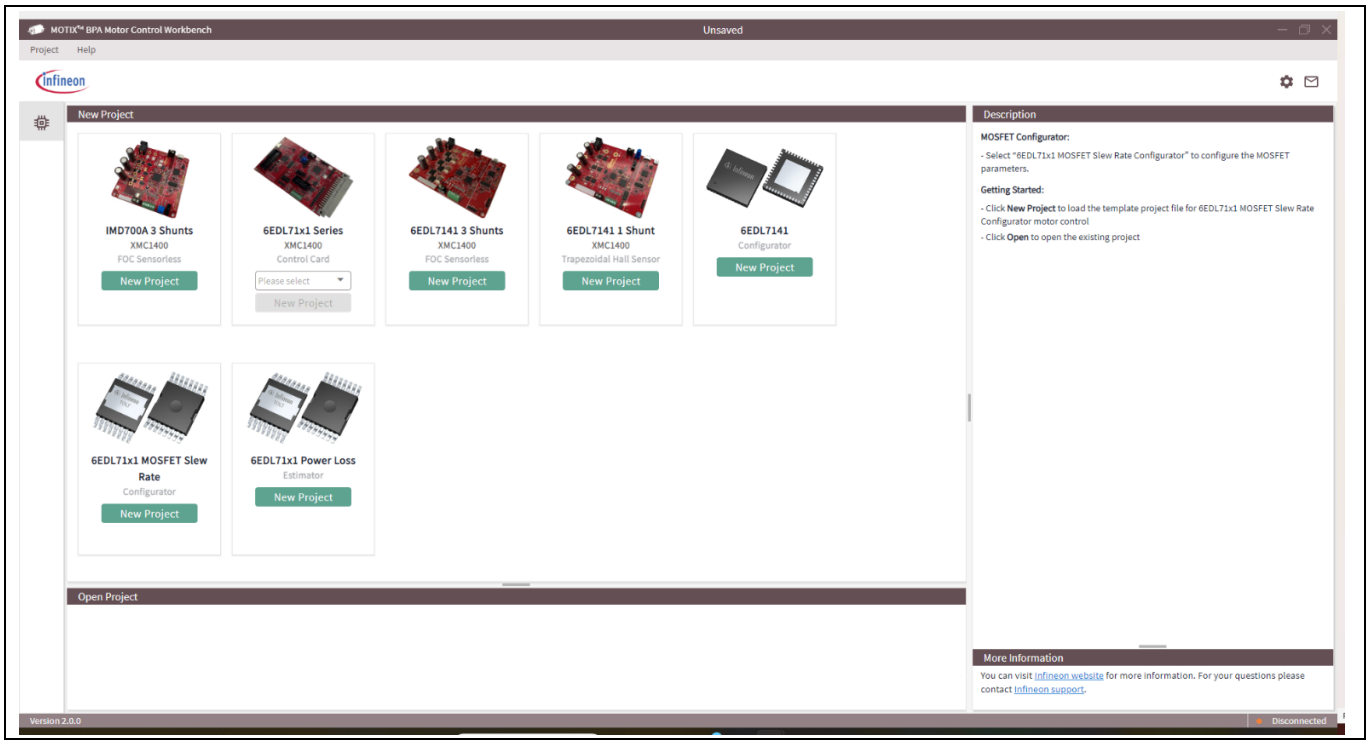

Figure 27 MOTIX™ BPA Motor Control Workbench

- Build a new project by clicking the **6EDL71x1 MOSFET Slew Rate**.

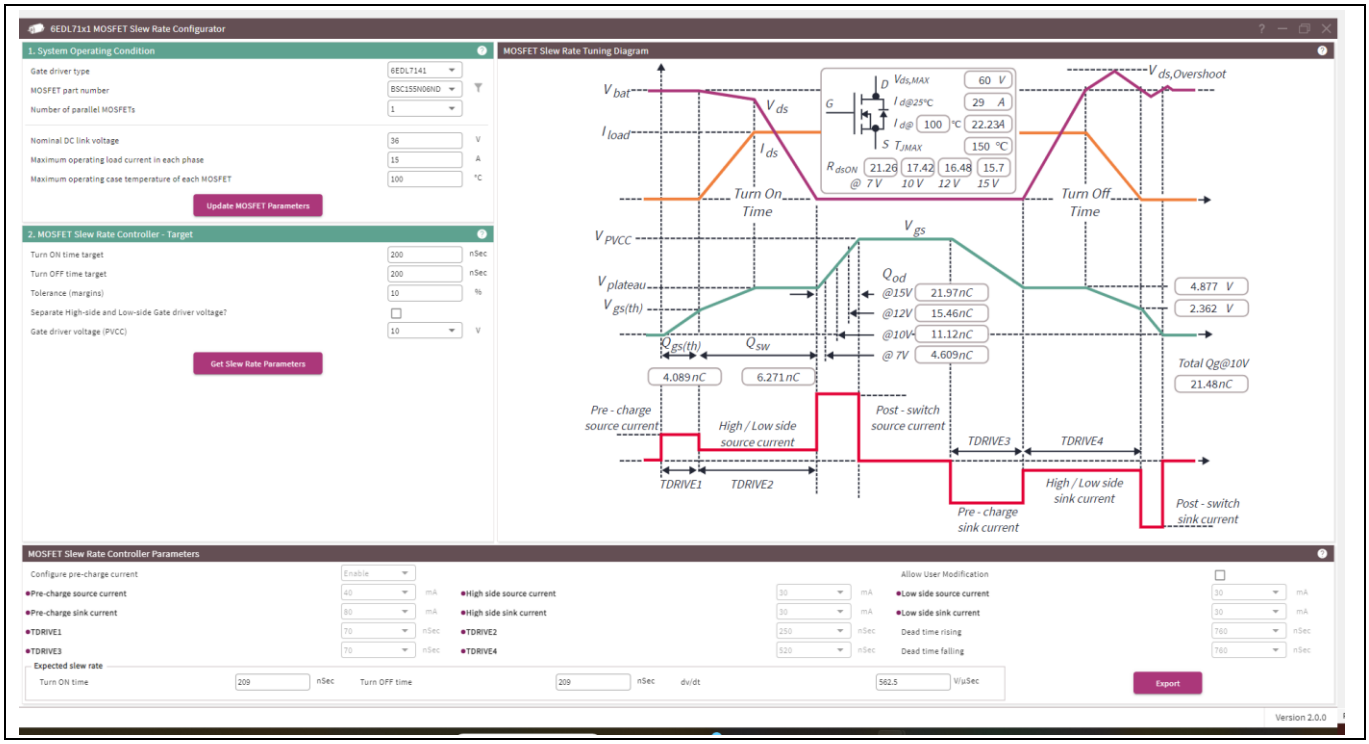

Figure 28 6EDL71x1 MOSFET Slew Rate Configurator

Performance

As Figure 28 shows, input the basic information of the system operating conditions. After adding the necessary data, click on the icon **Update MOSFET Parameter**. Then, go to the **MOSFET Slew Rate Controller-Target**, and input the target performance that you would like to achieve in the solution. Finally, click on the icon of **Get Slew Rate Parameter**. All setting parameters needed to be set in the 6EDL71x1 will be shown in the **MOSFET Slew Rate Controller Parameters** and for your convenience they are also listed in the following table.

Table 5 List of calculated gate drive parameters

Parameter	Description	Value
I_{HS_SRC}	Source current value for switching on high-side MOSFETs	30 mA
I_{HS_SINK}	Sink current value for switching off high-side MOSFETs	30 mA
I_{LS_SRC}	Current value for switching on low-side MOSFETs	30 mA
I_{LS_SINK}	Current value for switching off low-side MOSFETs	30 mA
I_{PRE_SRC}	Pre-charge current value for switching on both high-side and low-side	40 mA
I_{PRE_SINK}	Pre-charge current value for switching off both high-side and low-side	80 mA
T_{DRIVE1}	Amount of time that I_{PRE_SRC} is applied. Shared configuration between high-side and low-side drivers	70 ns
T_{DRIVE2}	Amount of time that I_{HS_SRC} and I_{LS_SRC} are applied. Shared configuration between high-side and low-side drivers	250 ns
T_{DRIVE3}	Amount of time that I_{PRE_SINK} is applied. Shared configuration between high-side and low-side drivers	70 ns
T_{DRIVE4}	Amount of time that I_{HS_SINK} and I_{LS_SINK} are applied. Shared configuration between high-side and low-side drivers	520 ns
T_{DT}	Dead-time for positive and negative transitions	760 ns

Note: In the lab measurement, it is found that T_{DRIVE3} of 140 ns and T_{DRIVE4} 300 ns were sufficient in this case.

6.4.2 Operating waveforms

The following waveforms were captured with the REF_36V_220W_SLFOC board at U phase current of 12 A and DC of 36 V inputs.

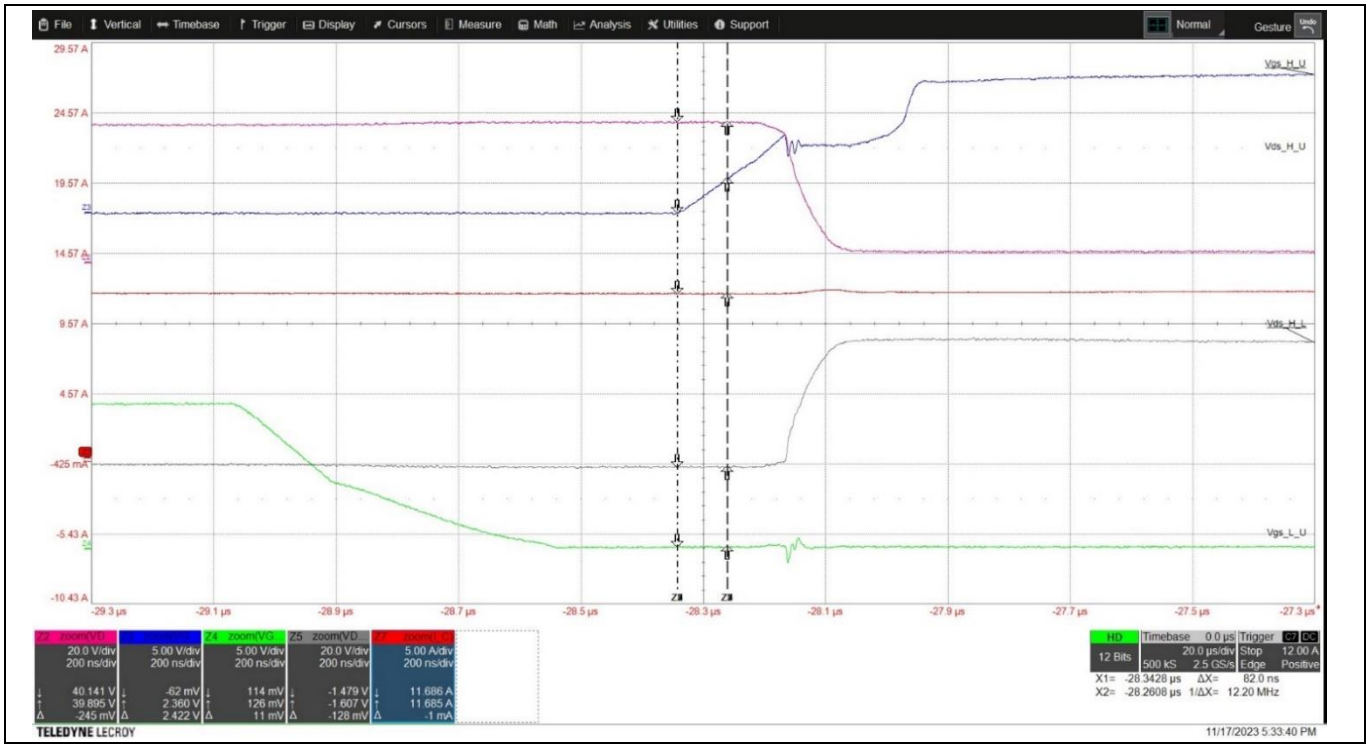

Figure 29 **T_{DRIVE1} of phase "U" node positive transition for 36 V input at 12 A phase current V_{GS_HS} (blue), V_{DS_HS} (red), V_{GS_LS} (green), V_{DS_HS} (grey), and V_{PHASE_U} (orange)**

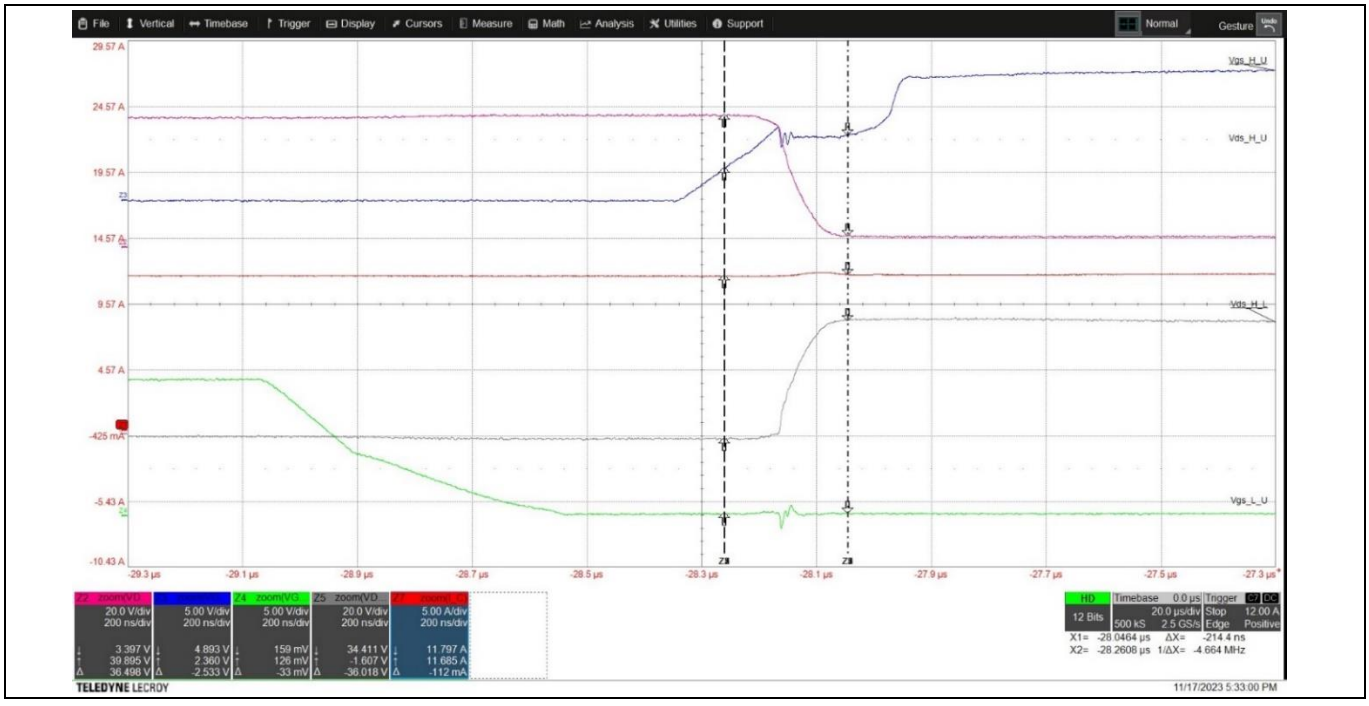

Figure 30 **T_{DRIVE2} of phase "U" node positive transition for 36 V input at 12 A phase current V_{GS_HS} (blue), V_{DS_HS} (red), V_{GS_LS} (green), V_{DS_HS} (grey), and V_{PHASE_U} (orange)**

Performance

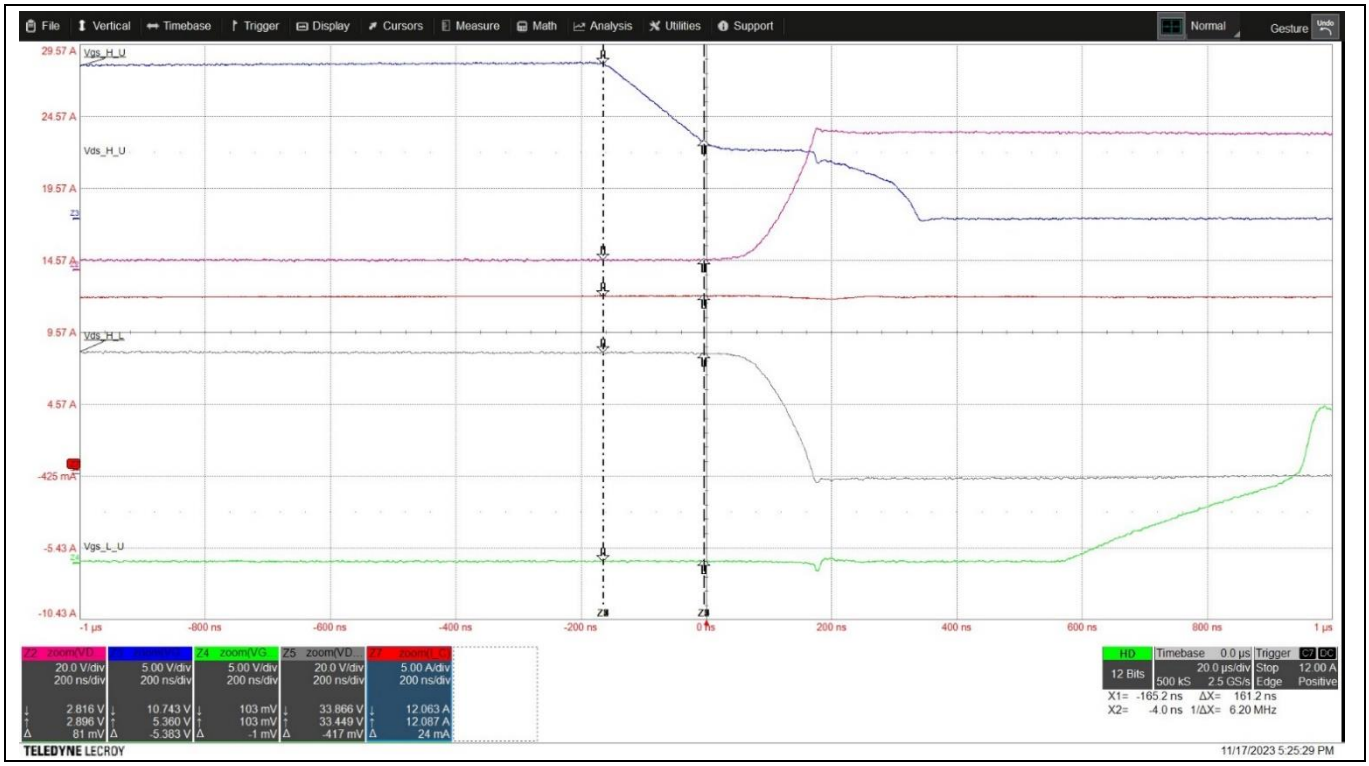

Figure 31 T_{DRIVE3} of phase "U" node positive transition for 36 V input at 12 A phase current V_{GS_HS} (blue), V_{DS_HS} (red), V_{GS_LS} (green), V_{DS_HS} (grey), and V_{PHASE_U} (orange)

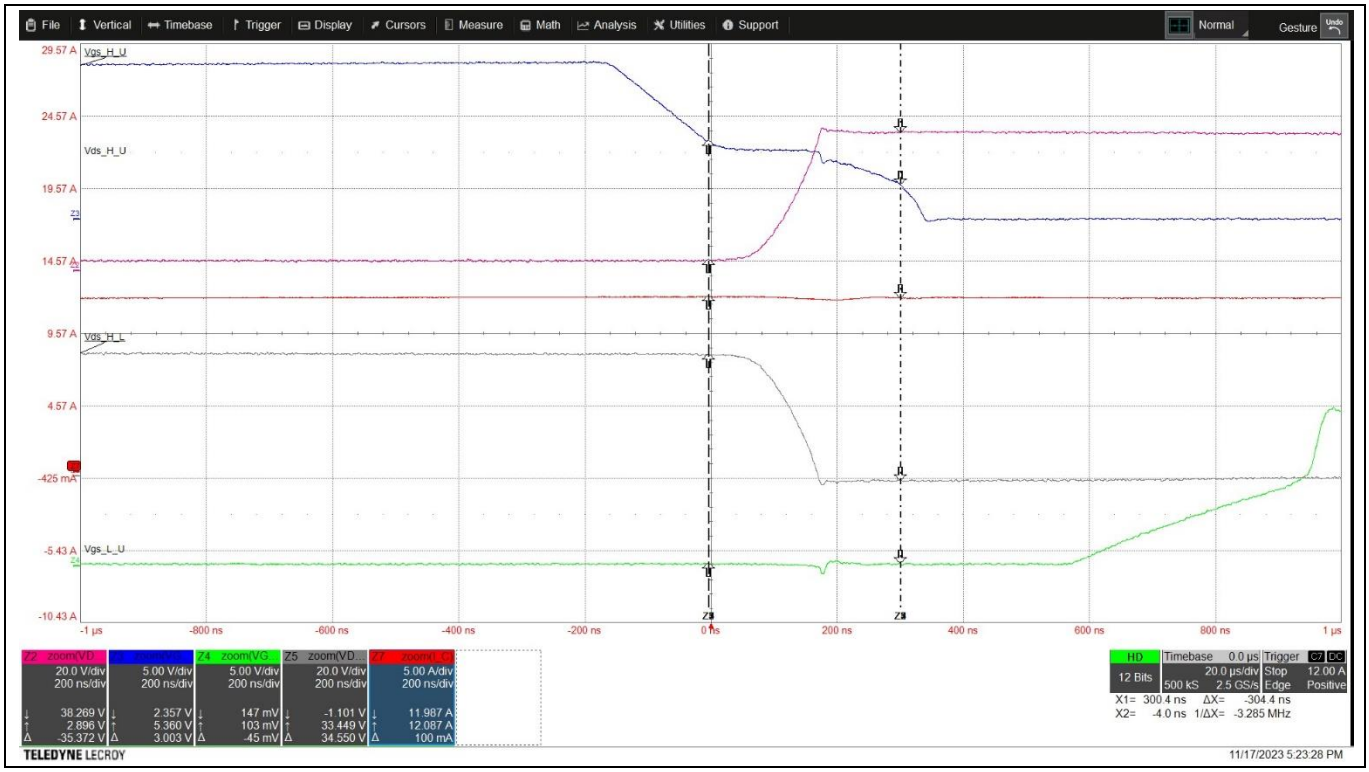

Figure 32 T_{DRIVE4} of phase "U" node positive transition for 36 V input at 12 A phase current V_{GS_HS} (blue), V_{DS_HS} (red), V_{GS_LS} (green), V_{DS_HS} (grey), and V_{PHASE_U} (orange)

Performance



Figure 33 Switching signals for 36 V input at 12 A phase "U" current $V_{GS_HS_W}$ (yellow), $V_{GS_LS_W}$ (red), $V_{GS_HS_V}$ (blue), $V_{GS_LS_V}$ (green), $V_{GS_HS_U}$ (grey), $V_{GS_LS_U}$ (light blue), Phase "U" current (orange)

References

[1] Infineon Technologies AG: *MOTIX™ IMD701A datasheet*; Available online

[2] Infineon Technologies AG: *PMSM FOC motor control software using MOTIX™ 6EDL7141 and MOTIX™ IMD700A*; Available online

[3] Infineon Technologies AG: MOTIX™ 6EDL7141 datasheet; Available online

Revision history

Document revision	Date	Description of changes
V 1.0	2024-02-07	Initial release

Trademarks
All referenced product or service names and trademarks are the property of their respective owners.

Edition 2024-02-07

Published by

Infineon Technologies AG

81726 Munich, Germany

© 2024 Infineon Technologies AG. All Rights Reserved.

Do you have a question about this document?

Email: erratum@infineon.com

Document reference

AN_2311_PL88_2312_065849

Important notice

The information contained in this application note is given as a hint for the implementation of the product only and shall in no event be regarded as a description or warranty of a certain functionality, condition or quality of the product. Before implementation of the product, the recipient of this application note must verify any function and other technical information given herein in the real application. Infineon Technologies hereby disclaims any and all warranties and liabilities of any kind (including without limitation warranties of non-infringement of intellectual property rights of any third party) with respect to any and all information given in this application note.

The data contained in this document is exclusively intended for technically trained staff. It is the responsibility of customer's technical departments to evaluate the suitability of the product for the intended application and the completeness of the product information given in this document with respect to such application.

Warnings

Due to technical requirements products may contain dangerous substances. For information on the types in question please contact your nearest Infineon Technologies office.

Except as otherwise explicitly approved by Infineon Technologies in a written document signed by authorized representatives of Infineon Technologies, Infineon Technologies' products may not be used in any applications where a failure of the product or any consequences of the use thereof can reasonably be expected to result in personal injury.